DOOSAN

Lynx 2100LY series
Lynx 2600Y series

Y axis added 6 inch/8 inch/10 inch Global Compact Turning Center

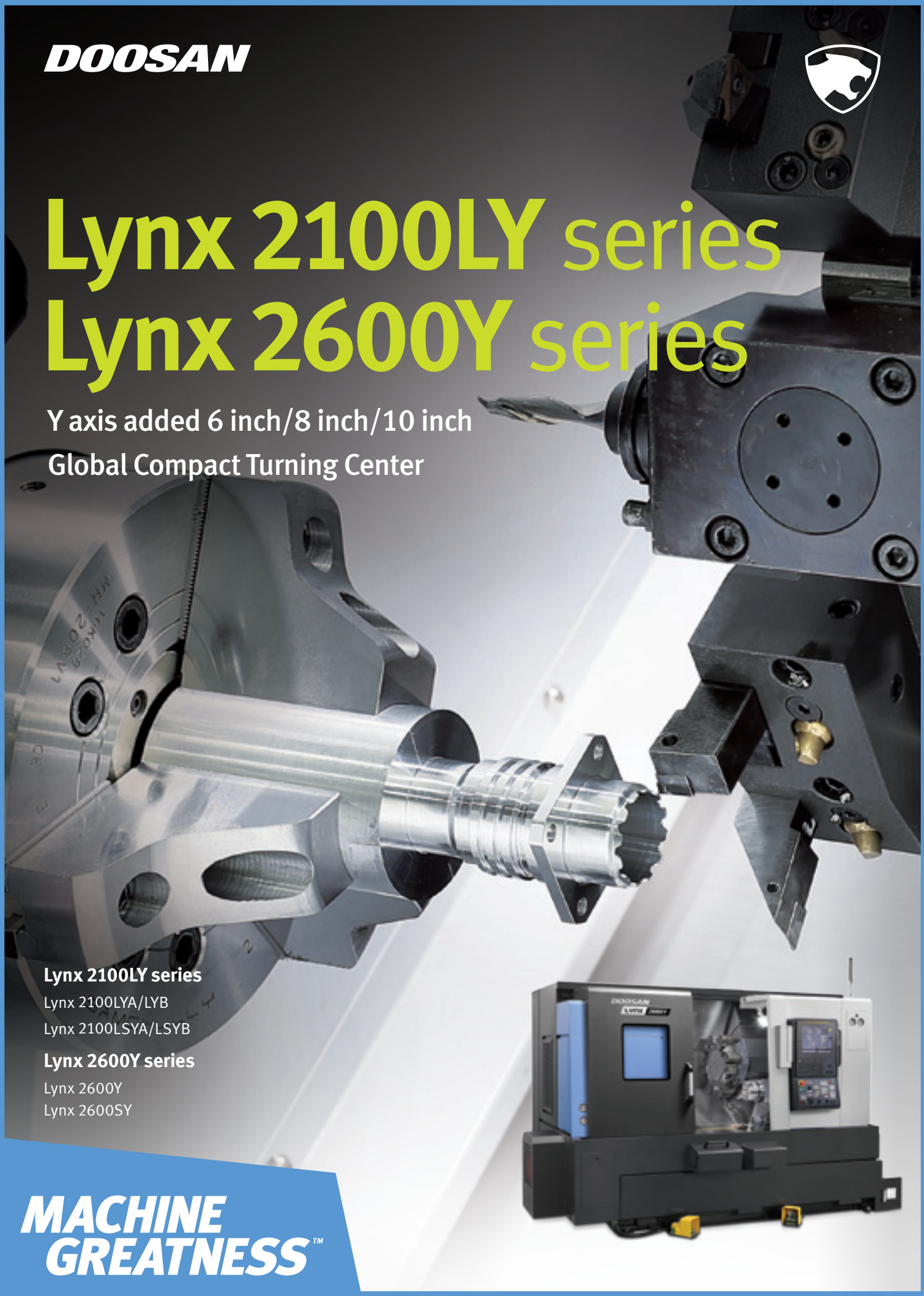

Lynx 2100LY series

Lynx 2100LYA/LYB

Lynx 2100LSYA/LSYB

Lynx 2600Y series

Lynx 2600Y

Lynx 2600SY

MACHINE GREATNESS™

Basic information

Basic Structure
Cutting
Performance

Detailed Information

Options
Applications
Diagrams
Specifications

Customer Support Service

Lynx 2100LY series
Lynx 2600Y series

Lynx 2100LY series is a new model with additional Y axis on the Lynx 2100 series and enables to complete complex machining using only one setup. Lynx 2600Y series has 380mm Max. machining diameter and upgraded structural rigidity/accuracy to increase its machining capability and productivity. Easy and high precision off-center machining is possible and the productivity has been highly improved through outstanding reduction of both cutting time and non-cutting time for complex shapes machining.

Contents

02 Product Overview

Basic Information

04 Basic Structure
07 Cutting Performance

Detailed Information

09 Standard / Optional Specifications
11 Applications
14 Diagrams
23 Machine / CNC Specifications

26 Customer Support Service

Various customer parts with Y axis complex machining

Easy machining of complex shapes with One setup

Additional Y axis (105 mm) and sub spindle help to make machining of parts with diverse and complex shapes faster and easier.

High Reliability

The Series' excellent reliability is based on the adoption of a wider support structure, more stable bed, low vibration/noise spindle, servo-driven turret, and a full slideway cover for preventing coolant leaks and chips from penetrating the machine.

Improved User Convenience

The new Easy Operation Package (EOP) and hot keys enable the user to operate peripheral devices quickly and conveniently. User convenience has been further enhanced with grease type lubrication and CNC tailstock.

Basic Structure

Stable high rigidity bed structure and application of roller type LM guide for all axes realize continued high rigidity and high accuracy of the machine.

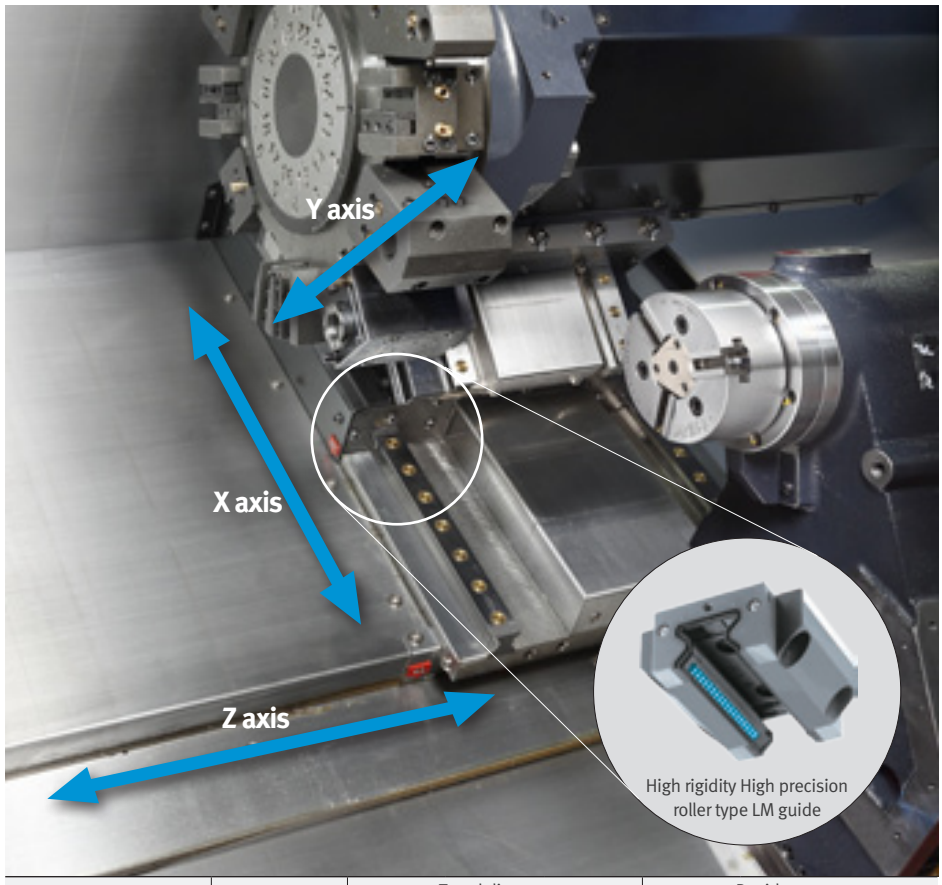

Model	Chuck size	Travel distance			Rapid traverse		
		X axis	Y axis	Z axis	X axis	Y axis	Z axis
Lynx 2100LYA/LSYA	6 inch	205 mm (8.1 inch)	105 mm (4.1 inch)	560 mm (22.0 inch)	30 m/min (1181.1 ipm)	10 m/min (393.7 ipm)	36 m/min (1417.3 ipm)
Lynx 2100LYB/LSYB	8 inch						
Lynx 2600Y/SY	10 inch	250 mm	105 mm (4.1 inch)	680 mm	30 m/min (1181.1 ipm)	10 m/min (393.7 ipm)	30 m/min (1181.1 ipm)

Structure and Machining area

Lynx 2100LY/2600Y series offers 4 models depending on the difference of chuck size and the presence or absence of sub spindle.

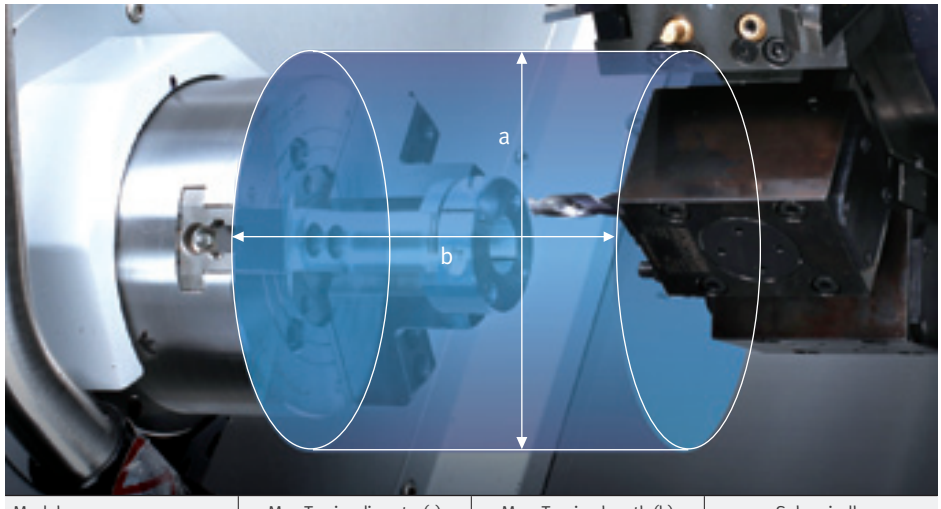

Model	Max. Turning diameter (a)	Max. Turning length (b)	Sub spindle
Lynx 2100LYA / LYB	300 mm* (11.8 inch)	510 mm (20.1 inch)	X
Lynx 2100LSYA / LSYB			O
Lynx 2600Y	380 mm** (15.0 inch)	610 mm (24.0 inch)	X
Lynx 2600SY			O

* Max. Turning diameter is 236 mm (9.3 inch) in case that optional 16 station turret is mounted
** Max. Turning diameter is 292 mm (11.5 inch) in case that optional 16 station turret is mounted

High performance Y axis complex machining

Free operation in all directions of the rotary milling tool using Y axis control perform a variety of complex shape machining easily with high accuracy.

Y axis Travel

105(±52.5)mm

(4.1 (±2.1) inch)

Y axis Rapid Traverse

10m/min

(393.7 ipm)

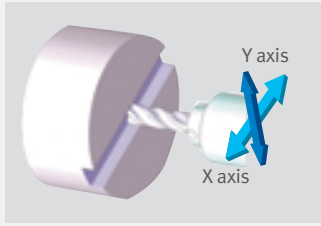

On-center face groove

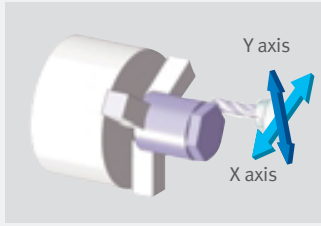

Poly-side machining

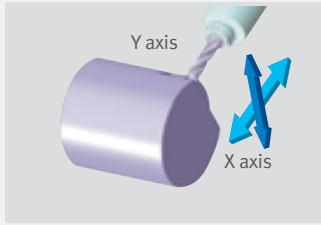

Off-center side groove

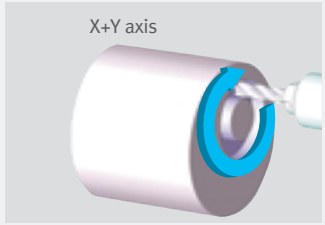

X&Y axis circular interpolation

Multi-tasking functions

Combined functions of spindle, sub spindle, Y axis and milling realize two or more general machines' manufacturing productivities.

Reduced production lead time

25%

Workpiece : Machinery Component
Material : Aluminum (AL7075)
Workpiece size : Ø70 x 35 mm
Cutting tool : 16 set

Machine 1
Setting 10 sec
Turning Cutting 1 min 10 sec
manual transfer 1 min
Machine 2
Setting 30 sec
Milling Cutting 6 min 20 sec

9min 10sec

Lynx 2100LSY
Setting 10 sec
Turning Cutting 1 min 5 sec
autotransfer 12 sec
Milling Cutting 5 min 30 sec

6min 57sec

Productivity 25 % Improved

* Cutting time curtailment : Tool change time & Rapid traverse rate Calculation

Lynx 2100 Series added with SY-axis, enabling One Set-up

Save time, reduce labor, high accuracy !

2 set-up / 2 operators

Machine 1 + Machine 2 =

1 set-up / 1 operator

Lynx 2100LSY

Spindle

The high power / torque motor supports high-precision and heavy-duty cutting, improving productivity.

Main spindle

Powerful spindle motor is capable of 0.001degree high accuracy C axis control and can provide large bar capacity until 65mm bar working diameter.

Max. spindle speed
6000 r/min
Lynx 2100LYA/LSYA

Spindle Motor Power
18.5 kW (24.8 Hp)
Lynx 2600Y/SY

Bar Working Dia.
81 mm (3.2 inch)
Lynx 2600Y/SY

Model	Max. Speed r/min	Max. Power kW (Hp)	Max.Torque N·m (ft-lbs)	Bar Working Dia. mm (inch)
Lynx 2100LYA/LSYA	6000	15 (20.1)	127 (93.7)	65 (2.6)
Lynx 2100LYB/LSYB	4500	15 (20.1)	169 (124.7)	65 (2.6)
Lynx 2600Y/SY	3500	18.5	403	81 (3.2)

Sub-spindle

The sub-spindle function enables rear-side cutting by a single setup, thereby maximizing the user's productivity and efficiency. Full C axis 0.001 degree control is included to optimize capability.

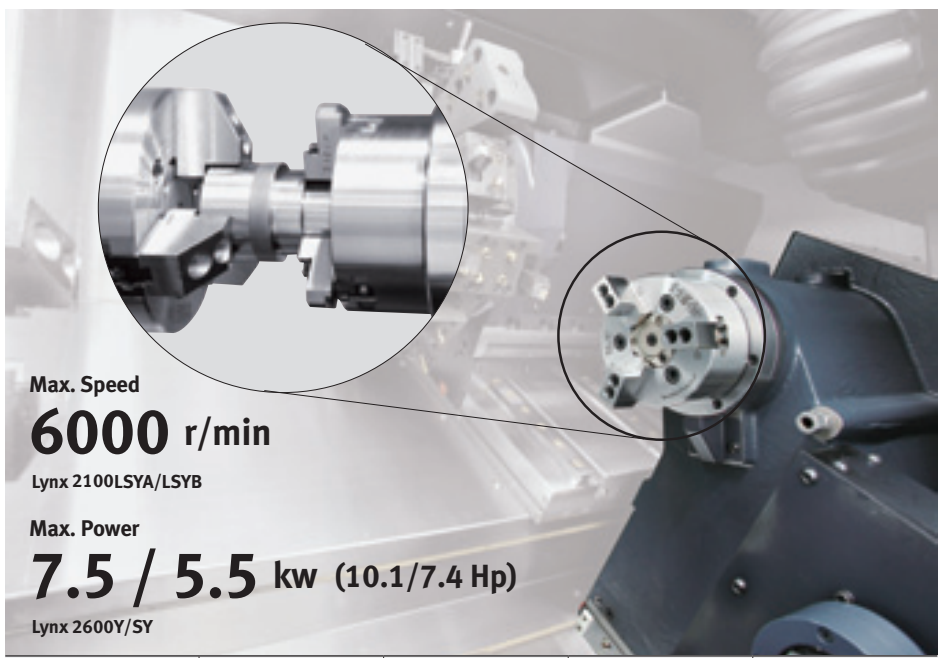

Models	Standard chuck size	Spindle speed r/min	Max.power (15min/ cont.) kW (Hp)	Max torque N·m (ft-lbs)
Lynx 2100LSYA/LSYB	5 inch	6000	5.5/3.7 (7.4 / 5.0) (15min/Cont.)	47 (34.7)
Lynx 2600Y/SY	6 inch	4500	7.5/5.5/5.5 (S6 25%/S6 40%/Cont.)	84 (62.0)

Turret

Servo driven indexing raise the reliability and BMT type milling turret ensures high rigidity.

Servo driven Turret

High torque servo motor controls rotational acceleration and deceleration of turret and clamping/ unclamping operations and its excellent dividing position brings continual high machining accuracy.

12 station

16 station

Lynx 2100LY

Number of Tool stations

12ea (24 position) (16ea option)

Indexing time

0.11s

Max. Rotary Tool Speed

BMT45P

6000 r/min (10000 r/min option)

Lynx 2600Y

Number of Tool stations

12ea (24 position option) (16ea option)

Indexing time

0.15s

Max. Rotary Tool Speed

BMT55P 5000 r/min

Cutting Performance

OD turning (turning dia. 88 mm (3.5 inch))			
Cutting speed	Feedrate	Cutting depth	Chip revoval rate
210 m/min (8268 ipm)	0.5 mm/rev (0.02 ipr)	4 mm (0.16 inch)	399 cm^3/min (24.3 $inch^3$/min)

U-drilling (2 axis)			
U drill dia.	Spindle speed	Cutting speed	Feedrate
Ø 63 mm (2.5 inch)	1011 r/min	200 m/min (7874 ipm)	0.15 mm/rev (0.006 ipr)

Drilling			
Tool dia.	Milling spindle speed	Cutting speed	Feedrate
Ø 12 mm (0.5 inch)	3184 r/min	120 m/min (4724 ipm)	0.20 mm/rev (0.008 ipr)

Endmill			
Tool dia.	Cutting speed	Feedrate	Cutting depth
Ø 12 mm (0.5 inch)	60 m/min (2362 ipm)	300 mm/rev (11.8 ipr)	14 mm (0.6 inch)

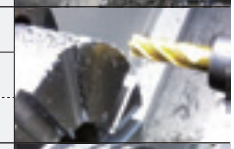

Tapping			
Tool	Milling spindle speed	Cutting speed	Feedrate
M14 X P1.75	387 r/min	17 m/min (669 ipm)	1.75 mm/rev (0.07 ipr)

* The results, indicated in this catalogue are provides as example. They may not be obtained due to differences in cutting conditions and environmental conditions during measurement.

Tailstock

Adoption of the hydraulic actuation type CNC tailstock (hydraulic type) enables tailstock positioning and work setting using the operation panel. The dedicated screen reduces the work setting time by about 50%.

CNC Tailstock (Hydraulic Type)_Lynx 2100LYA / LYB /2600Y standard

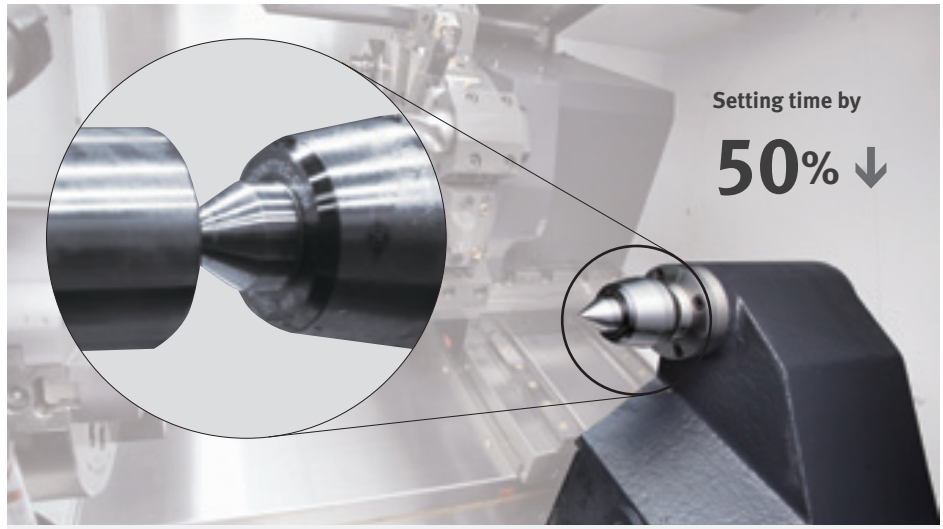

The EOP (Easy Operation Package) System enables fast and easy tailstock position setting and control.

Work clamp	Tailstock moving	Auto memory of support point by a quick and simple operation (button)	Auto support or retreat using the M-code or buttons on the operation panel

Doosan Gantry Loader

Doosan Gantry Loader is compact and easy customized stand alone type automation solution controlled by motion controller.

Discription		Unit	DOOSAN Gantry Loader for Lynx 2100LY/LSY
Travel*	Z / Y axis	mm (inch)	4422 / 1046 (174.1 / 41.2)
Rapid traverse	Z / Y axis	m/min (ipm)	210 / 180 (8267.7 / 7086.6)
Work Capacity		mm (inch)	Ø150 x 90 (5.9 x 3.5)
		kg (lb)	3 (6.6)
Number of Pallets (Work Stocker)		st	14

* The travel distance is in case of A3 type. For further information, please contact to DOOSAN.

Standard / Optional Specifications

Diverse optional devices and features are available to meet specific customer requirements.

● Standard ○ Optional X Not applicable

NO.	Description	Features	Lynx 2100LYA	Lynx 2100LYB	Lynx 2100LSYA	Lynx 2100LSYB	Lynx 2600Y	Lynx 2600SY
1	chuck	6 inch	●	X	●	X	X	X
2		8 inch	○	●	○	●	X	X
3		10 inch	X	○	X	○	●	●
4		12 inch	X	X	X	X	○	○
5		No chuck	○	○	○	○	○	○
5		5 inch (for sub spindle)	X	X	●	●	X	X
6		6 inch (for sub spindle)	X	X	X	X	●	●
7	Jaw	Soft Jaw	●	●	●	●	●	●
8		Hard Jaw	○	○	○	○	○	○
9	Chucking option	DUAL PRESSURE CHUCKING	○	○	○	○	○	○
10		CHUCK CLAMP CONFIRMATION	○	○	○	○	○	○
11	Tailstock	CNC Tailstock (Hydraulic type)	●	●	X	X	●	X
12	Coolant pump	1.5 bar	●	●	●	●	●	●
13		Increase power (4.5/7/10/14.5/20 bar)	○	○	○	○	○	○
14	Coolant options	Chuck coolant	○	○	○	○	○	○
15		TSC for sub spindle	X	X	○	○	X	○
16		Coolant chiller	○	○	○	○	○	○
17		Oil skimmer	○	○	○	○	○	○
18		Coolant pressure switch	○	○	○	○	○	○
19		Coolant level switch : Sensing level - Empty / Low / Enough / Full	●	●	●	●	○	○
21		Coolant gun	○	○	○	○	○	○
22	Chip disposal options	Side type chip conveyor	○	○	○	○	○	○
23		Rear type chip conveyor	○	○	○	○	○	○
24		Chip bucket	○	○	○	○	○	○
25		Air blower	○	○	○	○	○	○
26		Mist collector interface	○	○	○	○	○	○
27		Integrated mist collector	○	○	○	○	○	○
28	Measuring & automation	Tool setter (Manual / Auto)	○	○	○	○	○	○
29		Part catcher with parts box	○	○	○	○	○	○
30		Part catcher with parts conveyor	○	○	○	○	○	○
31		Workpiece ejector	X	X	○	○	X	○
32		Auto door	○	○	○	○	○	○
33		Bar feeder interface	○	○	○	○	○	○
34		Robot interface	○	○	○	○	○	○
35		Axis-tool number display	○	○	○	○	○	○
36	Others	Tool load monitoring system	○	○	○	○	○	○
37		Linear scale	○	○	○	○	○	○
38		signal tower	○	○	○	○	○	○
39		Air gun	○	○	○	○	○	○
40		Automation power off	○	○	○	○	○	○
41		Quick change tooling(CAPTO)	○	○	○	○	○	○
42		Sketch-turn S/W	○	○	○	○	○	○
43	Customized Special Option	AUTOMATIC TOP DOOR	○	○	X	X	X	X
44		SHOWER COOLANT	○	○	○	○	○	○
45		DUAL PRESSURE COOLANT FOR MAIN TURRET	○	○	○	○	○	○
46		AUTO. WORK MEASUREMENT_ OLP40_RENISHAW	○	○	○	○	○	○
47		TSC FOR MAIN/LEFT SPINDLE_ PREPARATION	○	○	○	○	○	○
48		MILLING TOOL HOLDER_UNIVERSAL	○	○	○	○	○	○

* Please contact DOOSAN to select detail specifications.

Peripheral Equipment

Chip Conveyor option 22, 23

Long | Short | Needle | **Sludge**

Chip conveyor type \ Material		Carbon steel			Cast iron		Aluminium		
		Long	Short	Needle	Short	Sludge	Long	Short	Needle
Hinged belt type*		○	△	X	△	X	○	△	X
Drum filter type**	Hinged type	○	△	X	△	X	○	△	X
	Scrapper	X	○	△	○	△	X	○	△

○ : Suitable, △ : Possible, X : Not suitable

Hinged belt type*
Most typical type of chip conveyor. Appropriate for steel materials generating chips of length of 30 mm or more.

Drum filter type**
Chip conveyor with magnet equipped:Appropriate for cast iron workpieces generating fine chips.

Quick change CAPTO option 41

The Quick Change Tool system simplifies tool change operation. Recommended for users who need to change tools frequently or reduce the set-up time.

Grease Lubrication System

The standard grease lubrication system eliminates the need for an oil skimmer and reduces lubrication costs by about 80% compared to oil lubrication.

Yearly maintenance cost
Max. **80%** ↓

Coolant Chiller option 16

The detachable coolant chiller is recommended to maintain thermal error at a minimal level and achieve superior machining precision.

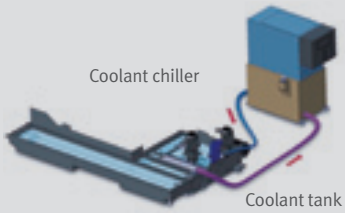

Axis-Tool number display option 35

Axis and tool number display in machine ensures the selected axis just before turning MPG during handle mode and to make it easier to see the number of the tool at working position.

Easy-to-clean Coolant Tank

The coolant tank can be isolated without removing the chip conveyor, significantly enhancing the operator's convenience.

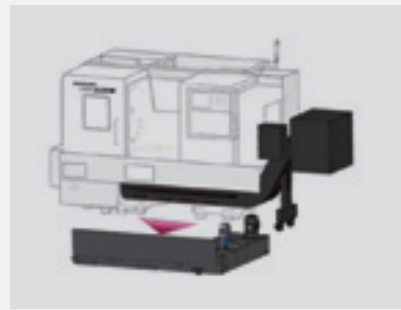

Tool Setter (Manual /Auto) (Tool length measurement device) option 28

The tool setter facilitates the setting of machining tools, and can be used to automatically compensate for worn tools accurately.

Part Catcher option 29, 30

The Part Catcher automatically catches finished parts and transfers them to the downstream processes.

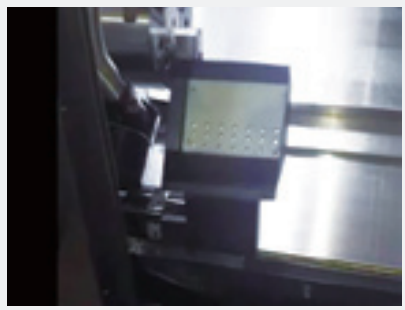

Oil Skimmer option 17

As the Lynx 2100 Series uses a grease type lubricant, the coolant rarely mixes with oil. This optional oil skimmer helps keep exceptional service life of the coolant.

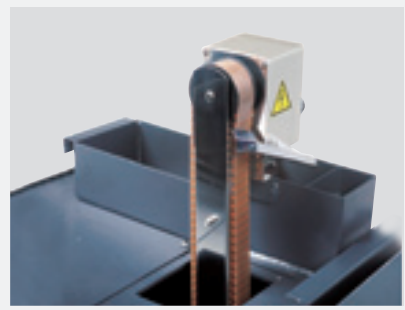

DOOSAN Fanuc i Plus

DOOSAN Fanuc i Plus is optimized for maximizing customer productivity and convenience.

15 inch screen + New OP

DOOSAN Fanuc i Plus' operation panel enhances operating convenience by incorporating common-design buttons and layout, and features the Qwerty keyboard for fast and easy operation.

DOOSAN Fanuc i Plus
- 15 inch color display
  Intuitive and user-friendly design

USB & PCMCIA card
QWERTY keyboard
- EZ-guide i standard
- Ergonimic operator panel
- 2MB Memory
- Hot key

iHMI Touch screen option
- iHMI provides an intuitive interface that utilizes a touch screen for quick and easy operation

Variety of applications
- Providing various applications related to PLANNING, MACHINING, IMPROVEMENT, and UTILITY for customer convenience.

Improved Productivity

Cycle time, mechanism operating speed, acceleration and deceleration are optimized and non-cutting times during cutting operation are analyzed and minimized to enhance productivity.

Non-cutting time reduced by
10%

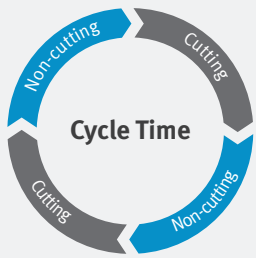

SKETCH-TURN option

DOOSAN Conversational programming software for PC
- Easy to learn for beginners
- Time savings in programming
- Reduce processing cycle time

EZ-Guide i

Using the DOOSAN EZ-Guide i, users can create a cutting program for any desired shape, including patterns, by entering the appropriate figures only.

Exemplary Programming

Cutting shape

EZ-Guide i Screen

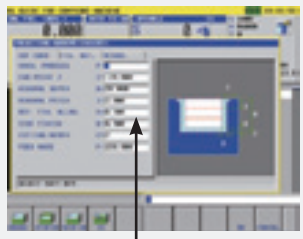

Enter the dimensions of the desired shape.

Automatic creation of cutting program

```
O7000 (SAMPLE PROGRAM) ;
...
M3 S1500 ;
G0 X50. Y125. ;
G0 Z30. ;
G1040 T0.5 J3. H0.2 K0.5 ··· ;
G1020 H120. V50. U37. W68. ··· ;
G0 Z80. ;
M5 ;
```

A cutting program is automatically created with the entered values.

Easy Operation Package

Doosan Easy Operation Package (EOP) supports the user with tool, help desk, operation, functionalities to maximize operational efficiency and user convenience.

Hot key

Home screen

Convenient set up for peripheral equipment

Helps tool setter guide, work setting, tailstock setting, and other measurement and parameter control to reduce setting-up time and facilitates operation.

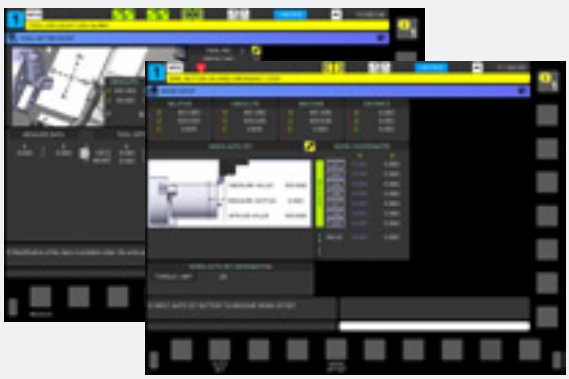

Crash Avoid Check

Set the interference area between turret and sub spindle to avoid collision

Sensor type Thermal Compensation (Lynx 2600Y/SY option)

Excute real-time thermal displacement measurement and correction and improve accuracy with attached sensors to bed, feed axis, spindle, etc

SIEMENS S828D

SIEMENS CNC optimized for DOOSAN machine tools maximizes users' productivity.

15.6 inch screen + New OP

The newly-designed operation panel enhances operating convenience by incorporating common-design buttons and layout, and features the Qwerty keyboard for fast and easy operation.

15.6-inch display

- USB (standard)
- QWERTY Keyboard (standard)

Conversational Convenient function

The machining monitoring function developed on the basis of the Shop Turn – an interactive machining support function of SIEMENS – provides users with cutting, servicing and maintenance screens for easy and convenient machine operation.

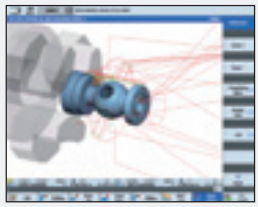

Cutting and operation support function

This function shows a cutting and tool path simulation of a cutting program on a real-time basis.

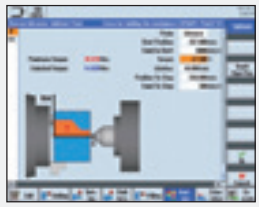

Shop-turn mode[various]
⬇
[attachments]

Tail stock function

Dialogic Sceen will help easy setting and operating about CNC Tail stock.basis.

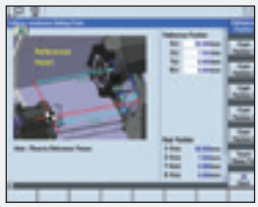

[offset]
⬇
[operating parameter]
⬇
[attachment setting]
⬇
[Collision avoidance]

Operation safety function

Spindle and Turret's interference could be checked before crash. So that it Protect operator's mistake.
[offset] [operating parameter]
[attachment setting] [Collision avoidance]

[offset]
⬇
[operating parameter]
⬇
[TC service]

Maintenance and service convenience function

Maintenance and service of major units and peripheral devices, timer setting and parts counter setting can be easily carried out on a convenient screen.

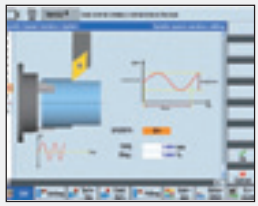

[various]
⬇
[attachment]
⬇
[DSSV]

Machining accuracy improvement

The NC controls spindle speed at an optimal level for precision threading and turning, making it possible to improve surface roughness automatically.

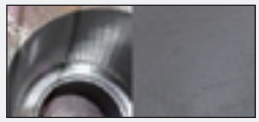

Before applying the function

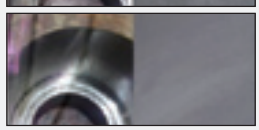

After applying the function

Power-Torque Diagram (FANUC)

Main Spindle

Lynx 2100LYA / LSYA

Speed **6000** r/min Power **15/11** kW **(20.1/14.8 Hp)**

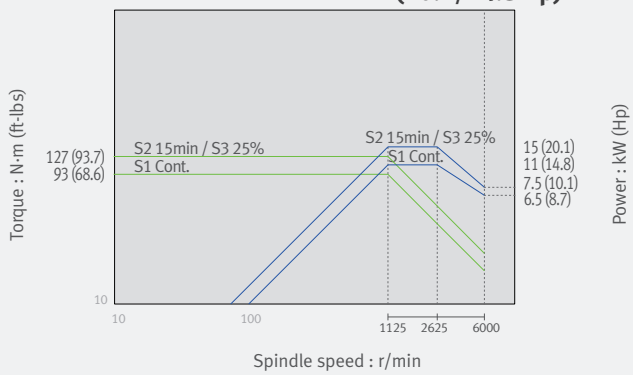

Lynx 2100LYB / LSYB

Speed **4500** r/min Power **15/11** kW **(20.1/14.8 Hp)**

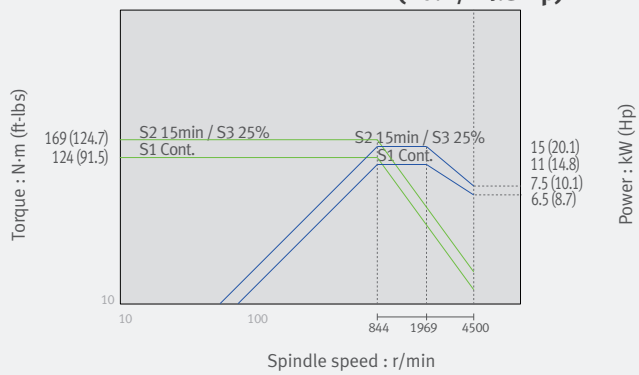

Sub-Spindle

Lynx 2100LSYA / LSYB

Speed **6000** r/min Power **5.5/3.7** kW **(7.4/5.0 Hp)**

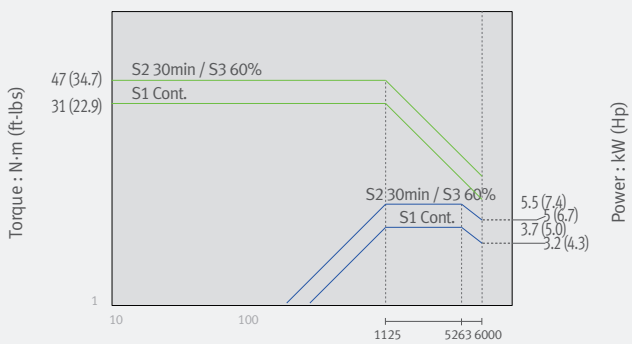

Rotary Tool

Lynx 2100LY / LSY

Speed **6000** r/min Power **3.7/1.1** kW **(5.0/1.5 Hp)**

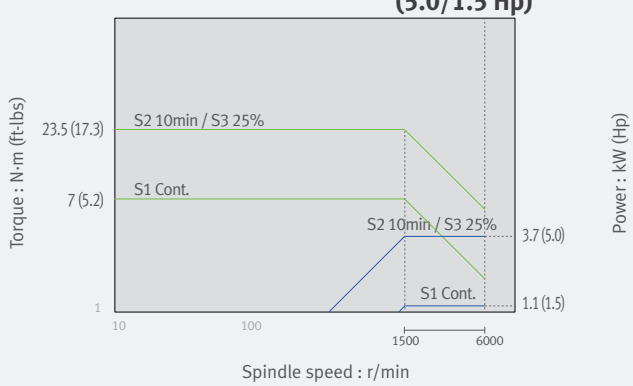

Lynx 2100LY / LSY option

Speed **10000** r/min Power **3.7/1.1** kW **(5.0/1.5 Hp)**

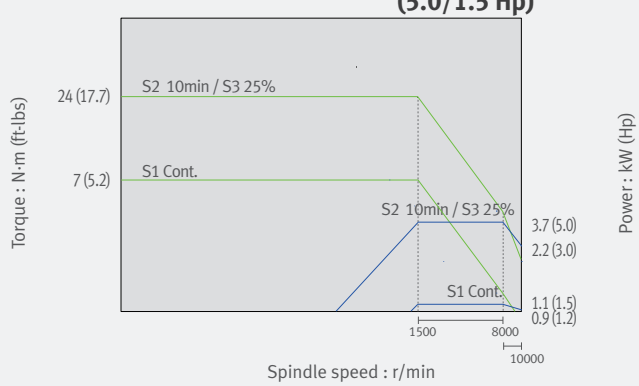

Power-Torque Diagram (FANUC)

Main Spindle

Lynx 2600Y/SY

Speed **3500** r/min Power **18.5/15/15** kW (24.8/20.1/20.1 Hp)

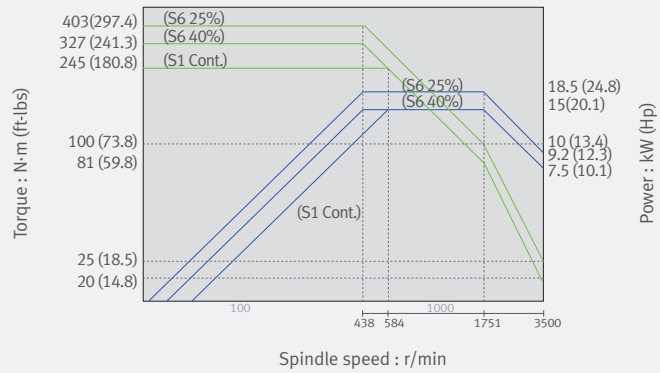

Sub-Spindle

Lynx 2600SY

Speed **4500** r/min Power **7.5/5.5/5.5** kW (10.1/7.4/7.4 Hp)

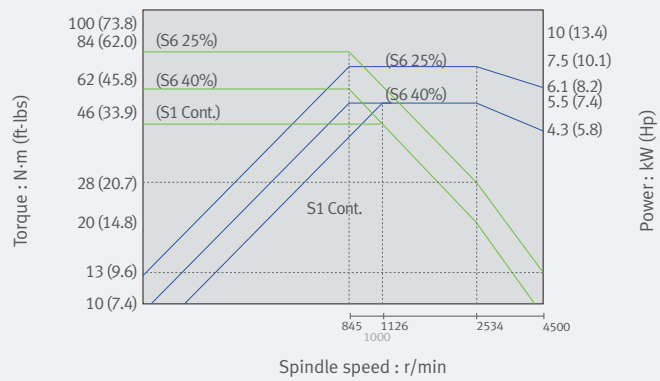

Rotary Tool

Lynx 2600Y/SY 12st., 12st.(24 positions option **)**

Speed **5000** r/min Power **5.5/2.2** kW (7.4/3.0 Hp)

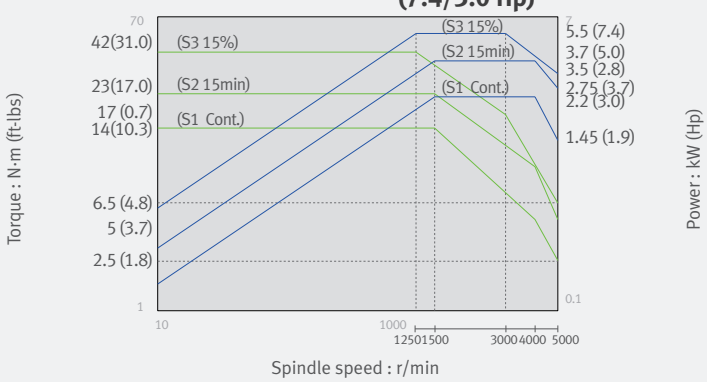

Lynx 2600Y/SY 16st. option

Speed **5000** r/min Power **7.5/1.5** kW (10.1/2.0 Hp)

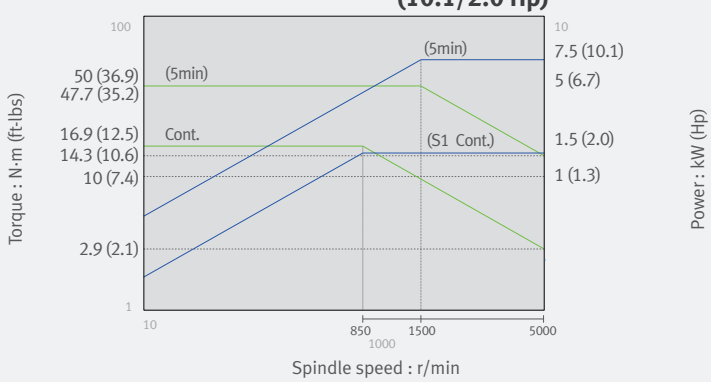

Power-Torque Diagram (SIEMENS)

Main Spindle

Lynx 2100LYA / LSYA

Speed **6000** r/min Power **12.6/10.5** kW **(16.9/14.1 Hp)**

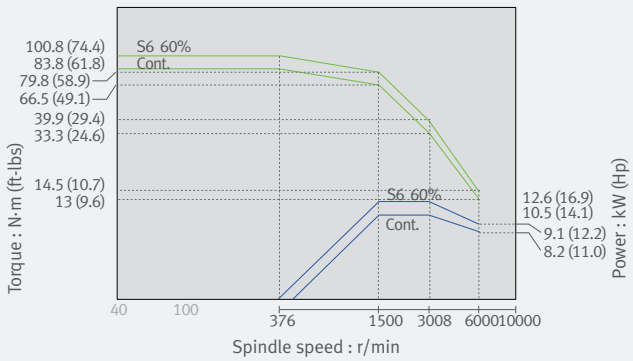

Lynx 2100LYB / LSYB

Speed **4500** r/min Power **12.6/10.5** kW **(16.9/14.1 Hp)**

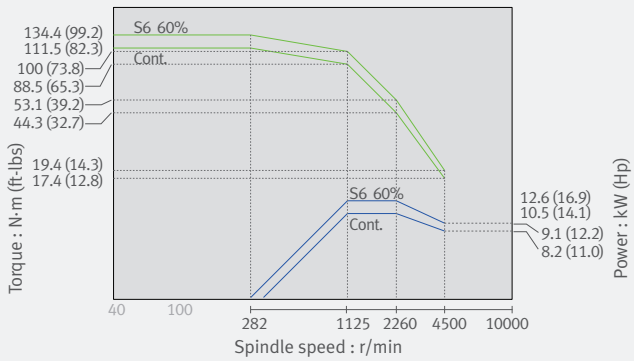

Sub-Spindle

Lynx 2100LSYA / LSYB

Speed **6000** r/min Power **7** kW **(9.4 Hp)**

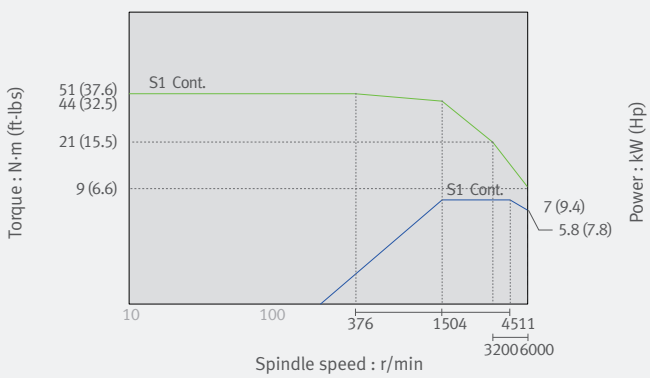

Rotary Tool

Lynx 2100LY / LSY

Speed **6000** r/min Power **6.2/4.1** kW **(8.3/5.5 Hp)**

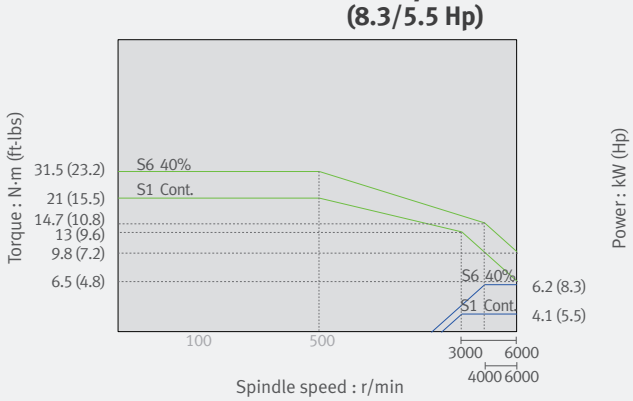

Lynx 2100LY / LSY option

Speed **10000** r/min Power **6.2/4.1** kW **(8.3/5.5 Hp)**

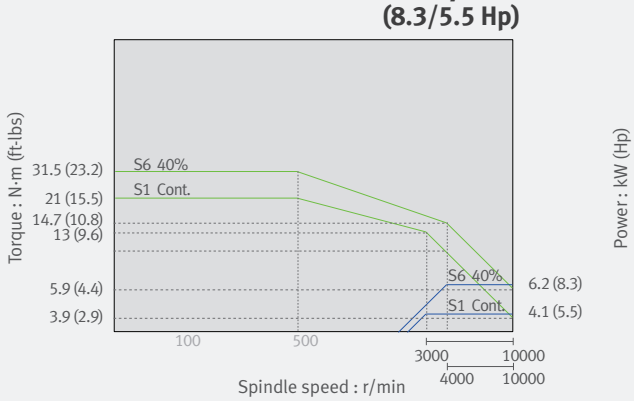

External Dimensions

Lynx 2100LY series

Unit : mm (inch)

Top View

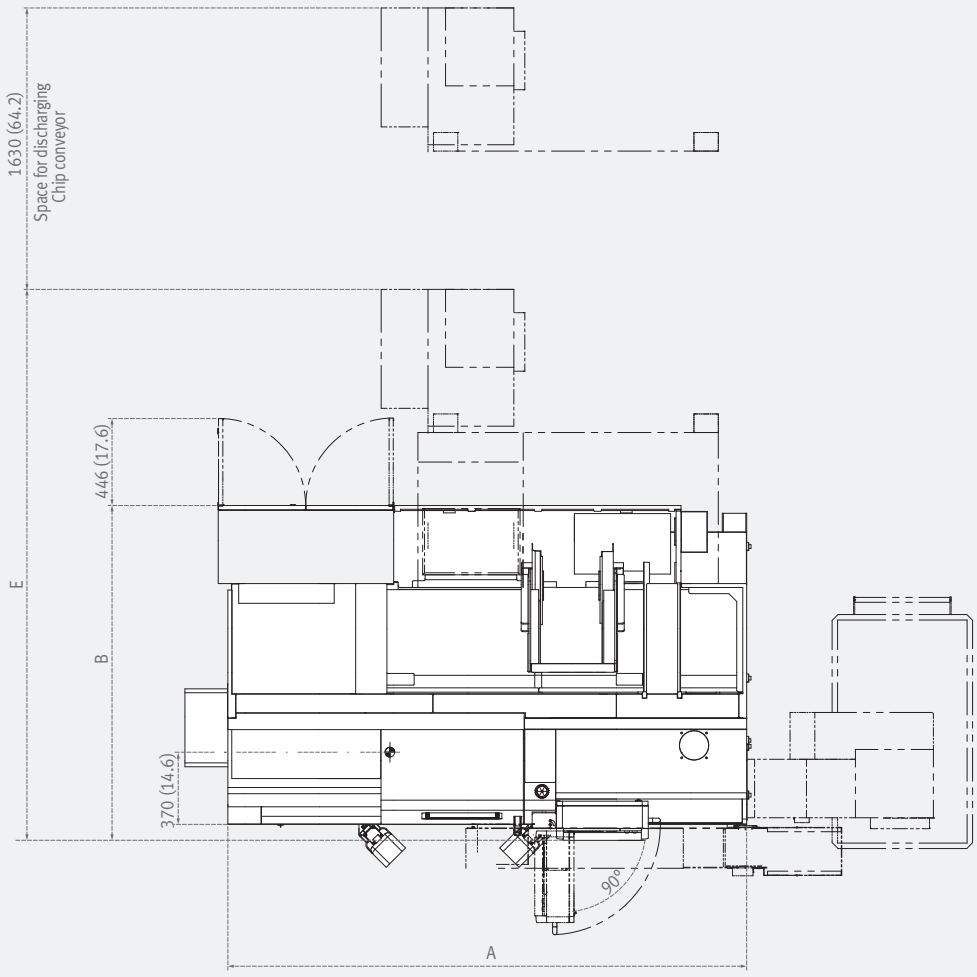

Front View

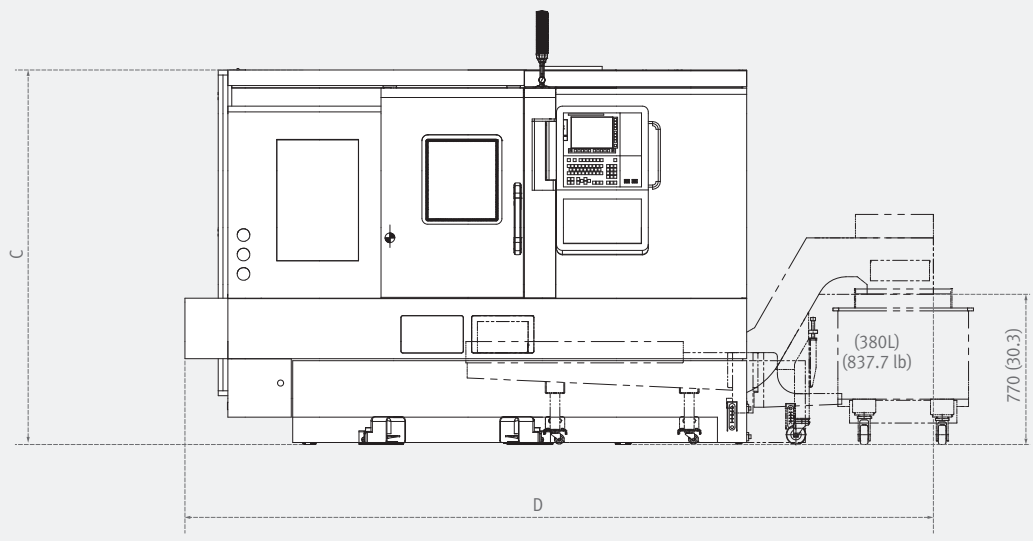

Models	A	B	C	D	E
Lynx 2100LYA / LSYA	2880 (113.4)	1711 (67.4)	1921 (75.6)	3838 (151.1)	2820 (111.0)
Lynx 2100LYB / LSYB	2880 (113.4)	1711 (67.4)	1921 (75.6)	3838 (151.1)	2820 (111.0)

* Some peripheral equipment can be placed in other places

External Dimensions

Lynx 2600Y series

Unit : mm (inch)

Top View

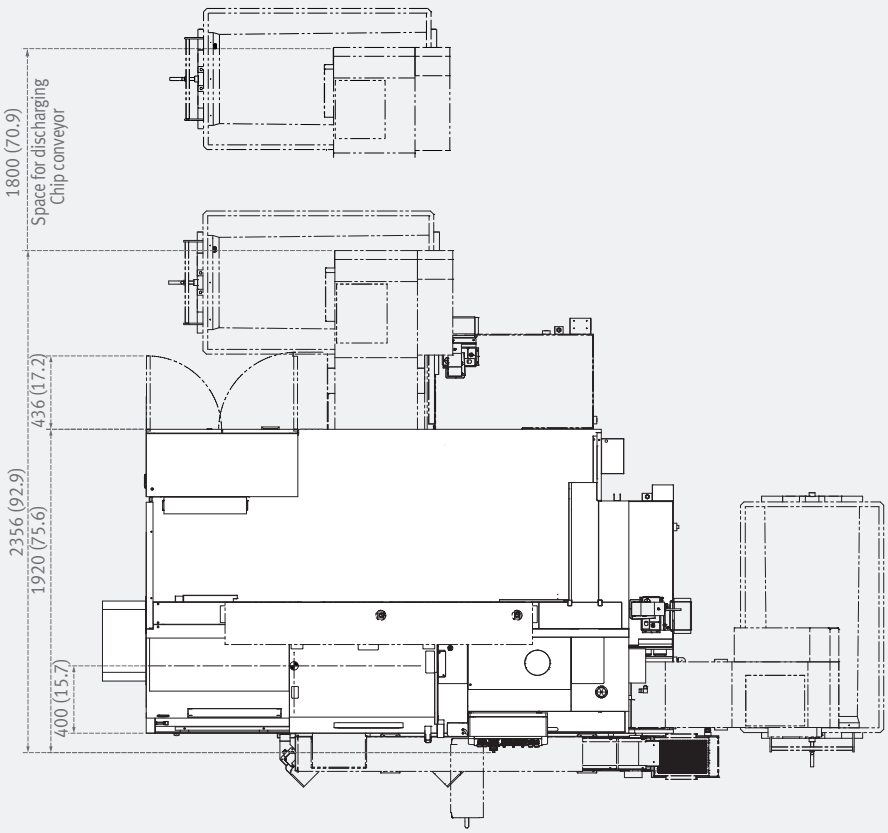

Front View

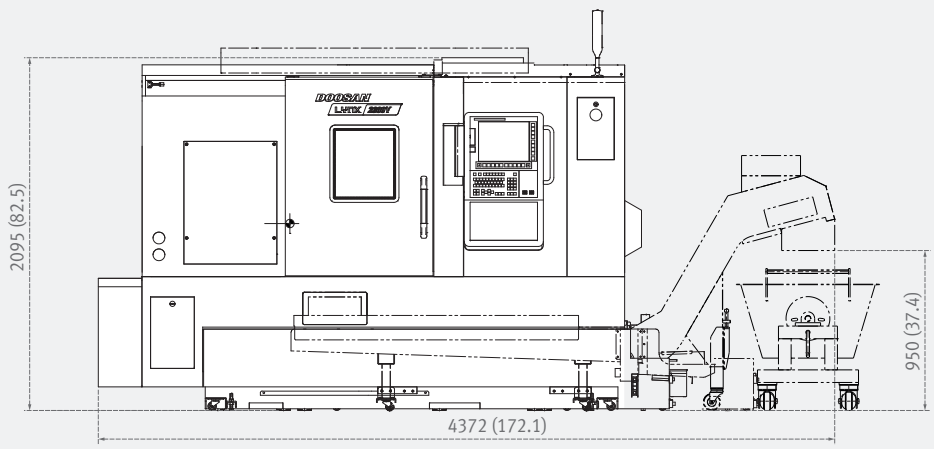

* 일부 주변장치는 다른 위치에 배치가 가능합니다.

Tool Interference Diagram

Lynx 2100LY

Unit : mm (inch)

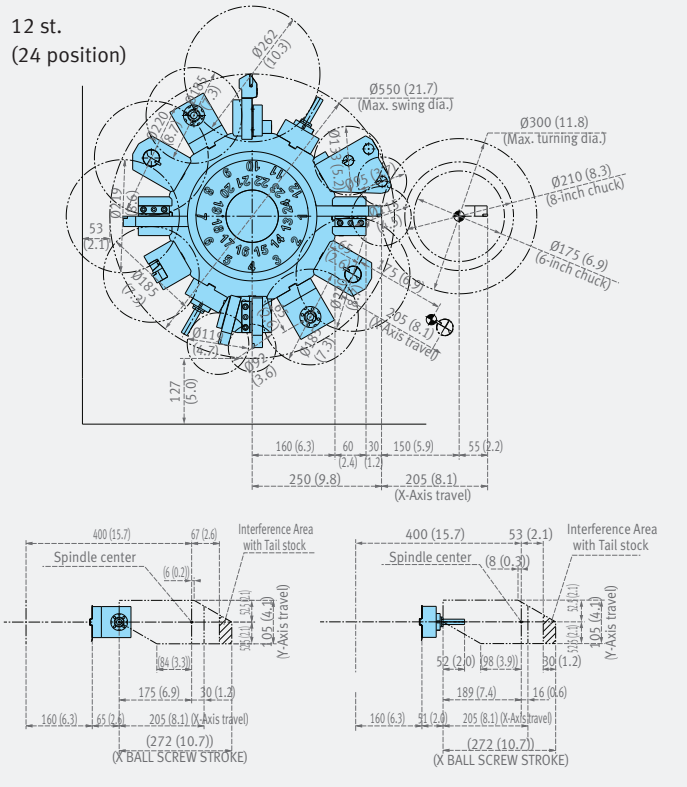

Unit : mm (inch)

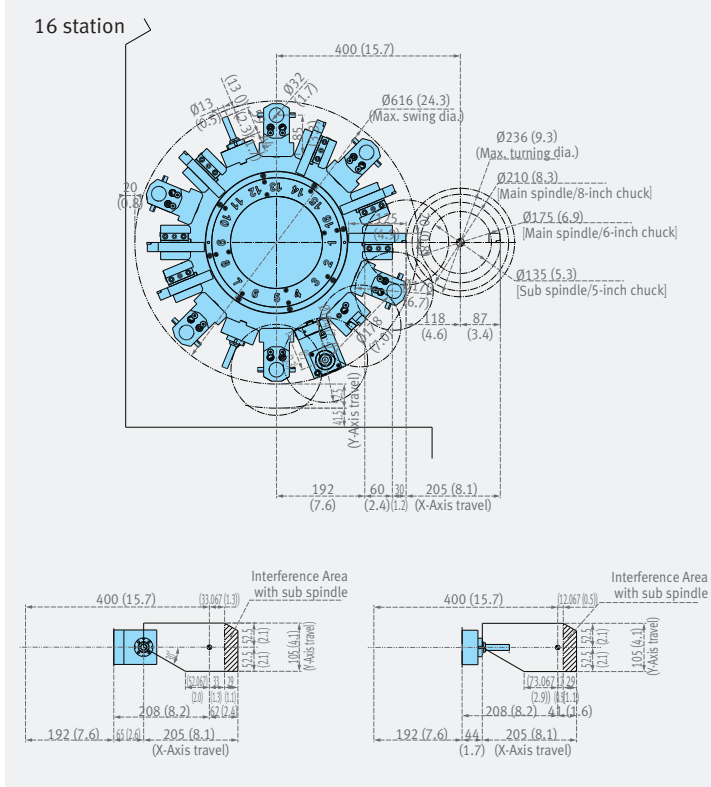

Lynx 2100LSY

Unit : mm (inch)

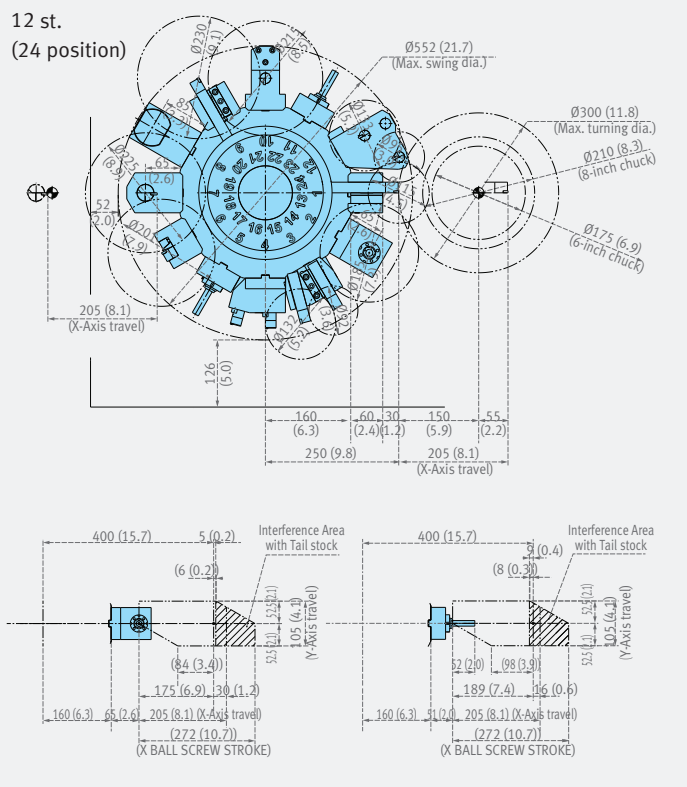

Unit : mm (inch)

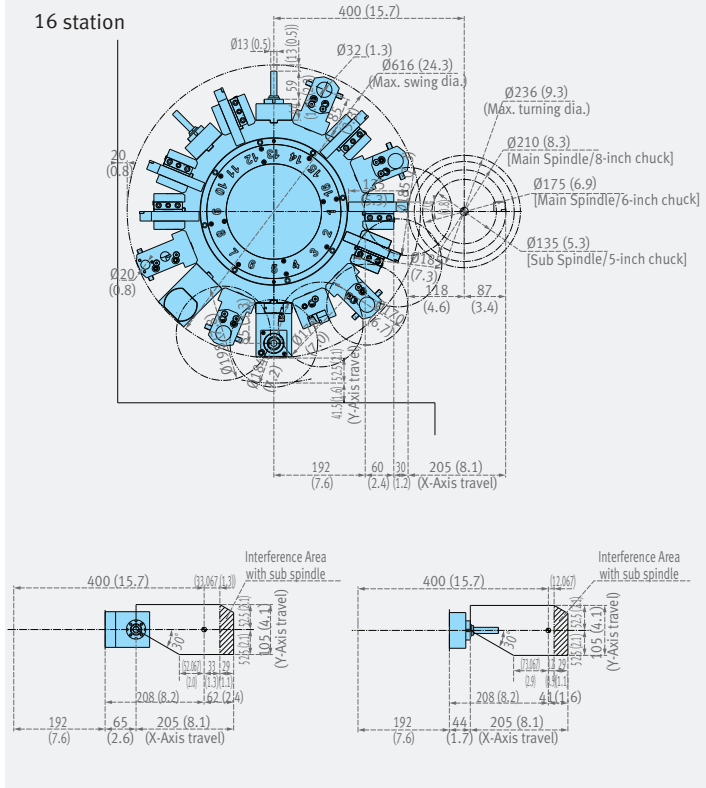

Tool Interference Diagram

Lynx 2600Y

Unit : mm (inch)

12 station

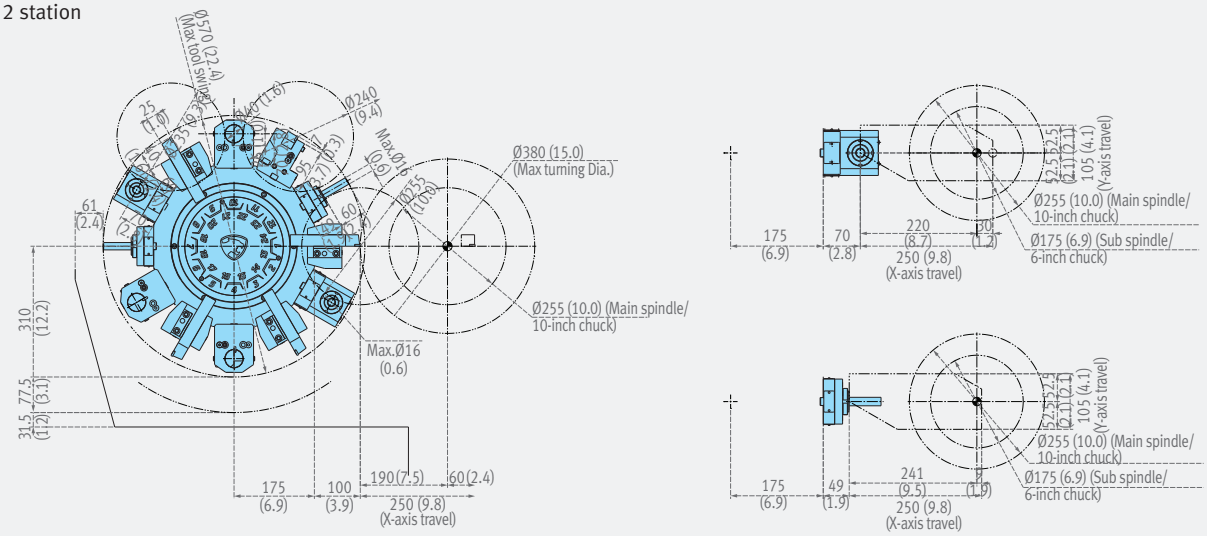

16 station

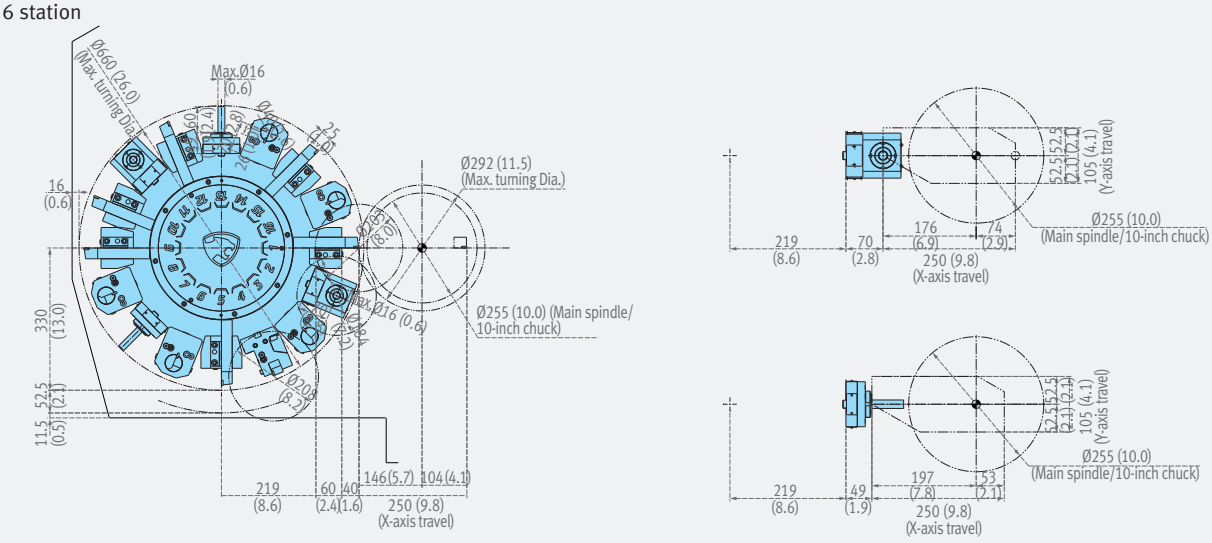

12 st. (24 position)

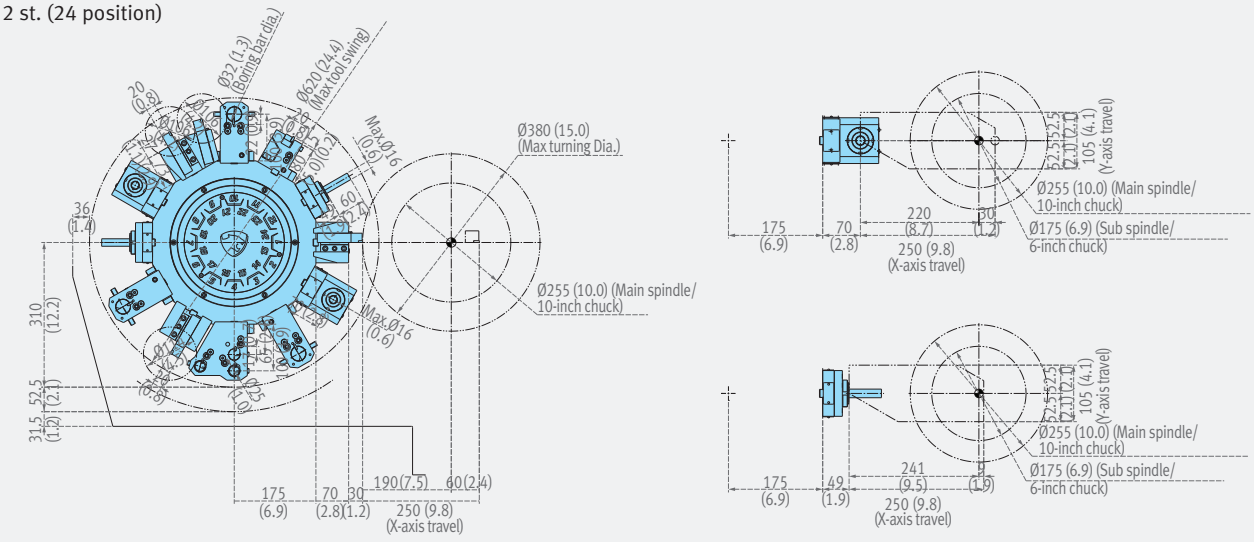

Lynx 2600SY

Unit : mm (inch)

12 station

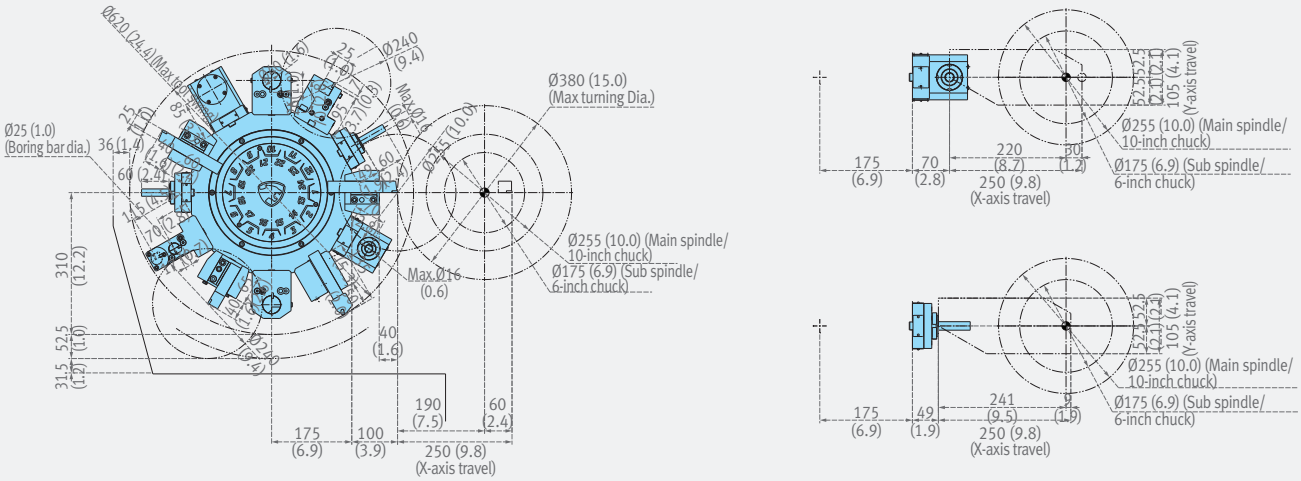

16 station

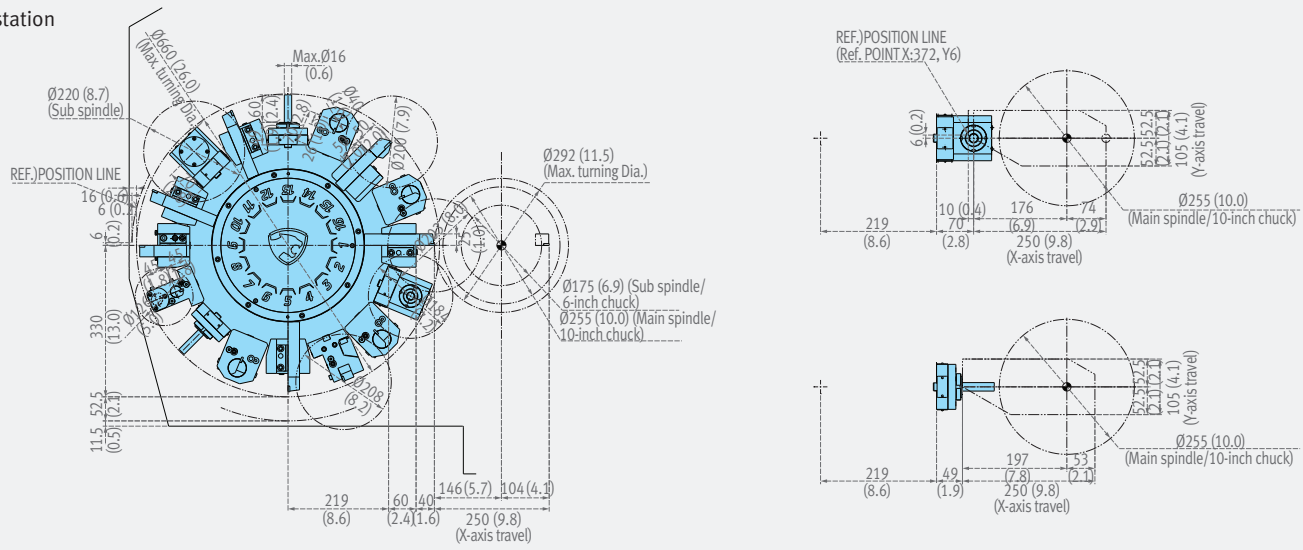

12 st. (24 position)

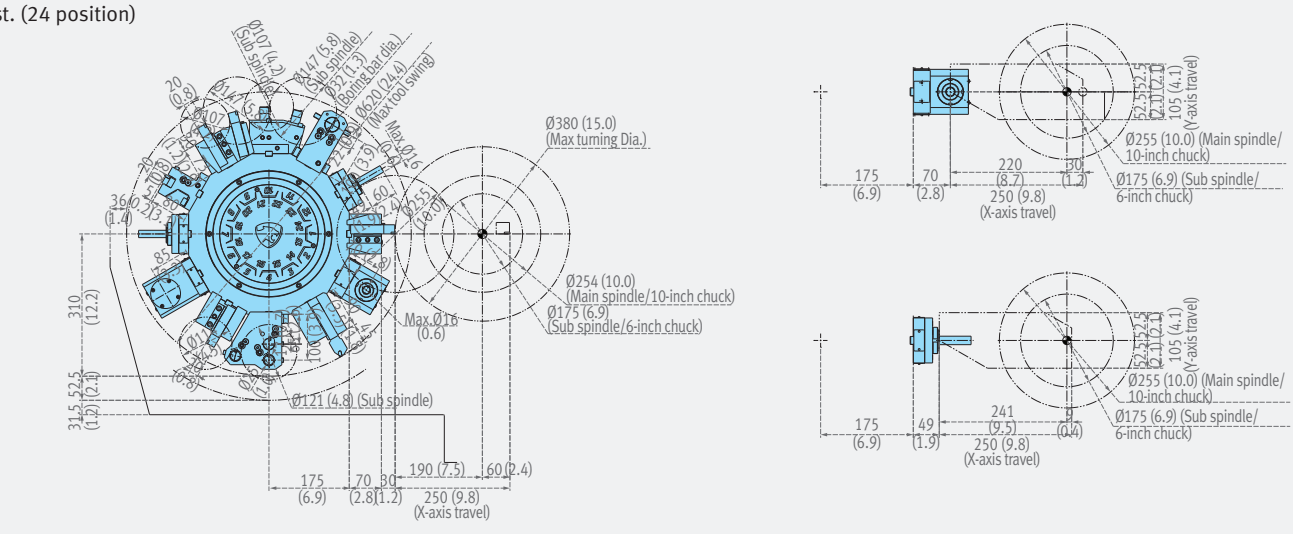

Tooling System

Lynx 2100LY

Unit : mm (inch)

12 station

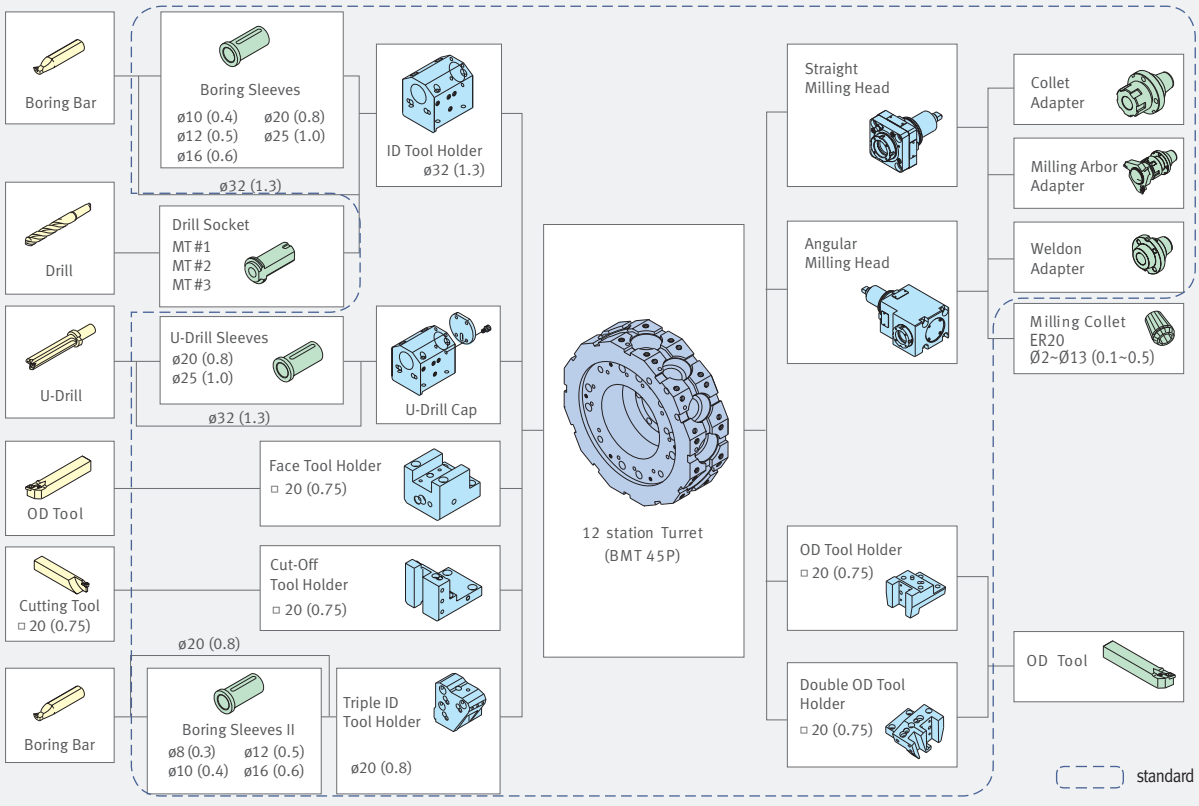

16 station

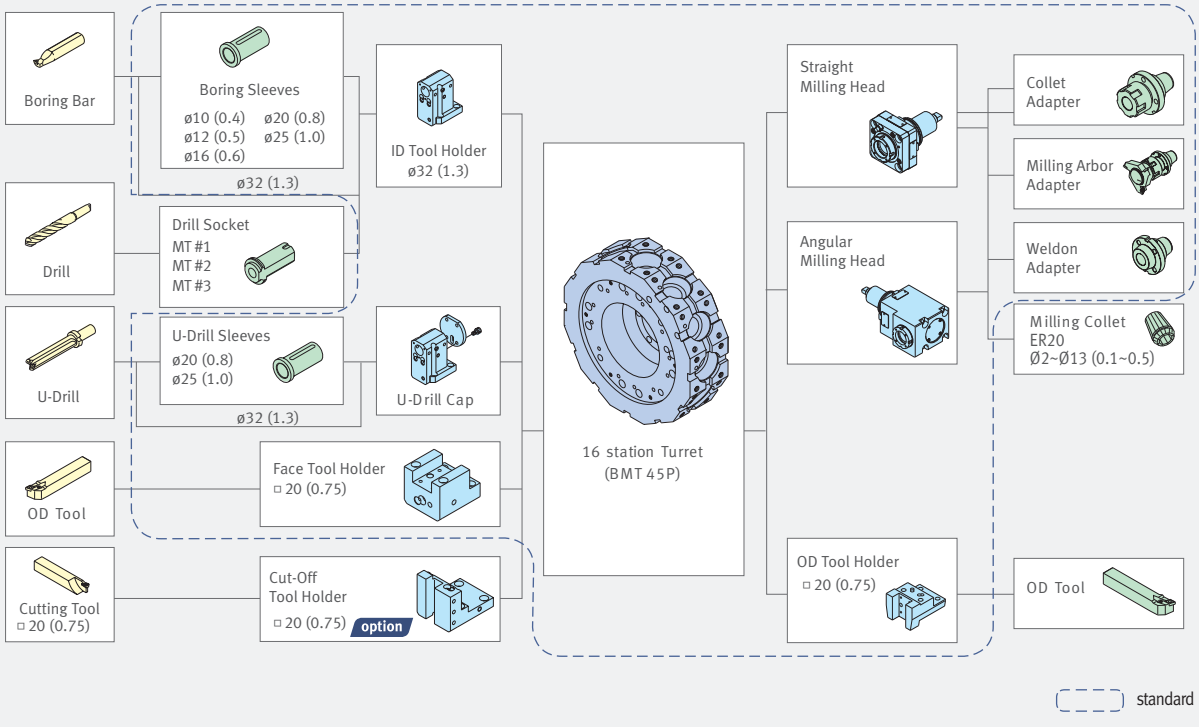

Lynx 2100LSY

Unit : mm (inch)

12 station

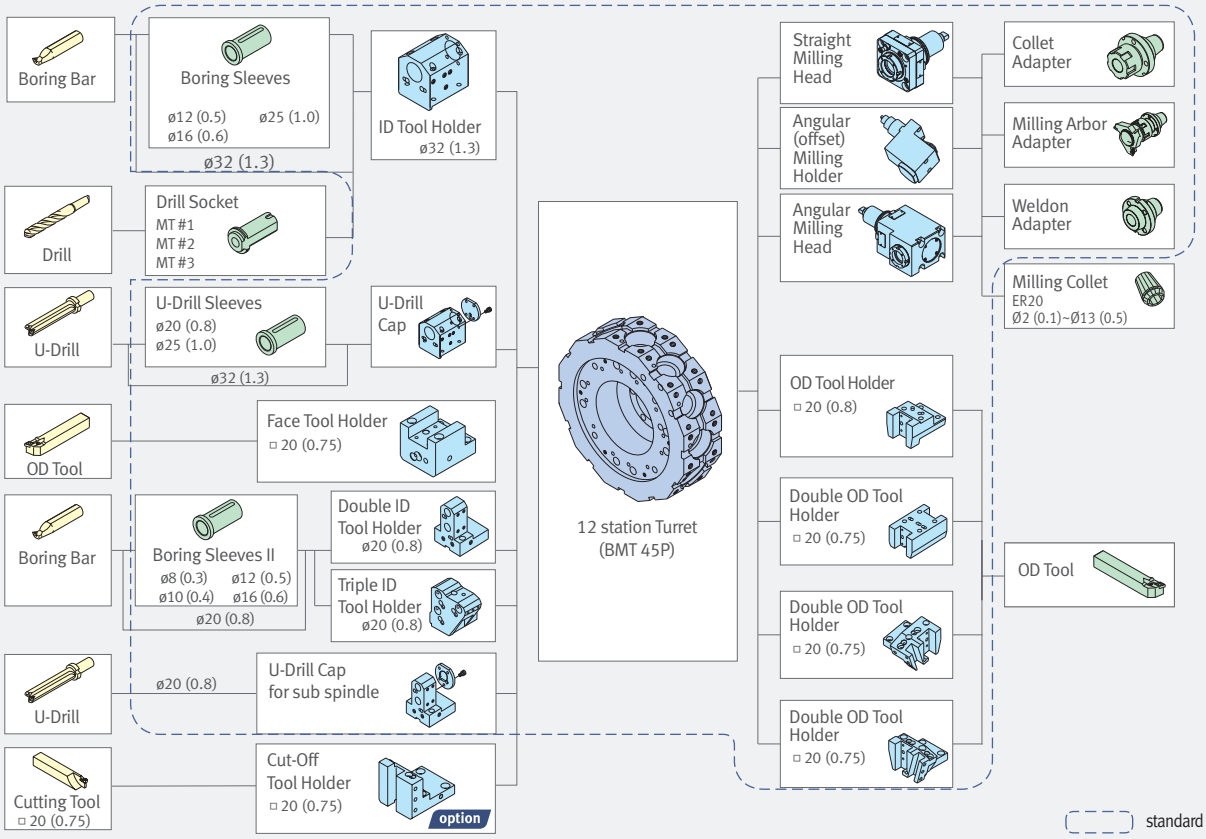

16 station

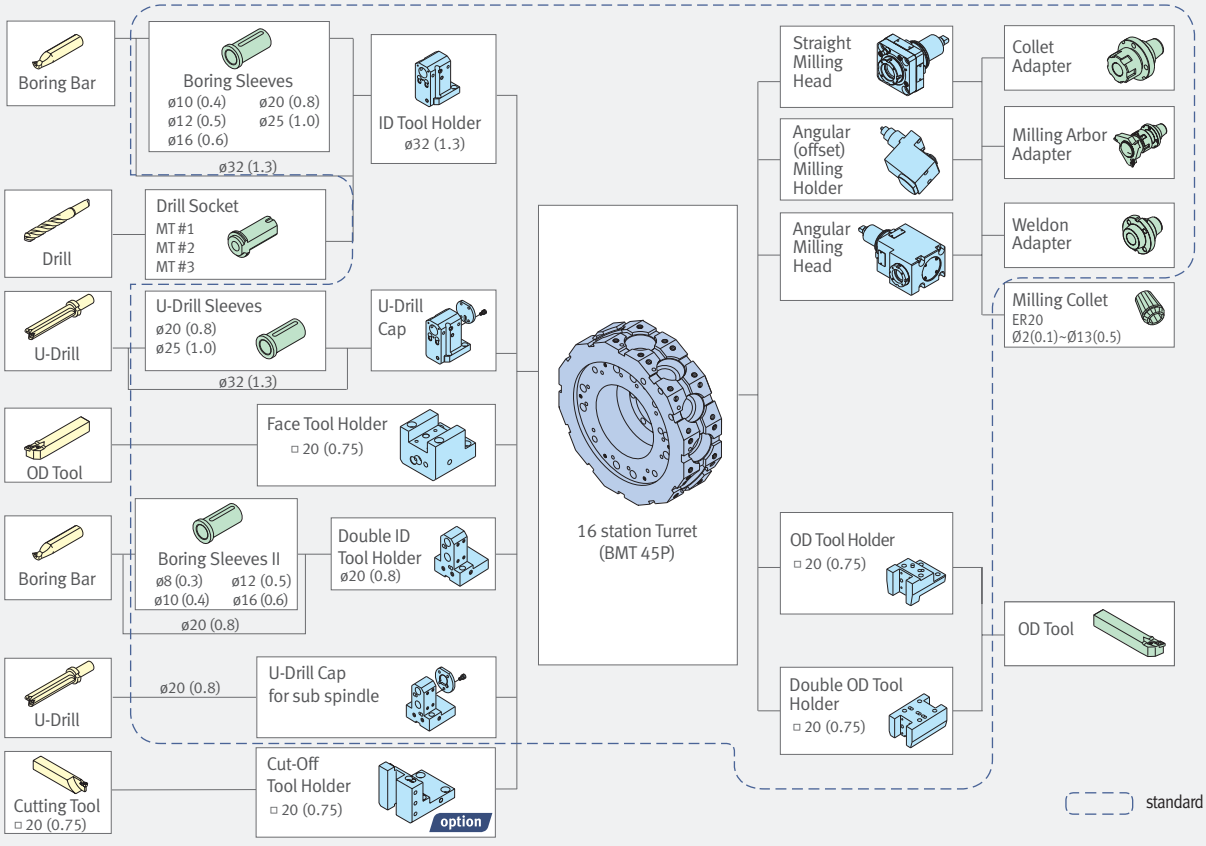

Tooling System

Lynx 2600Y

Unit : mm (inch)

12 station

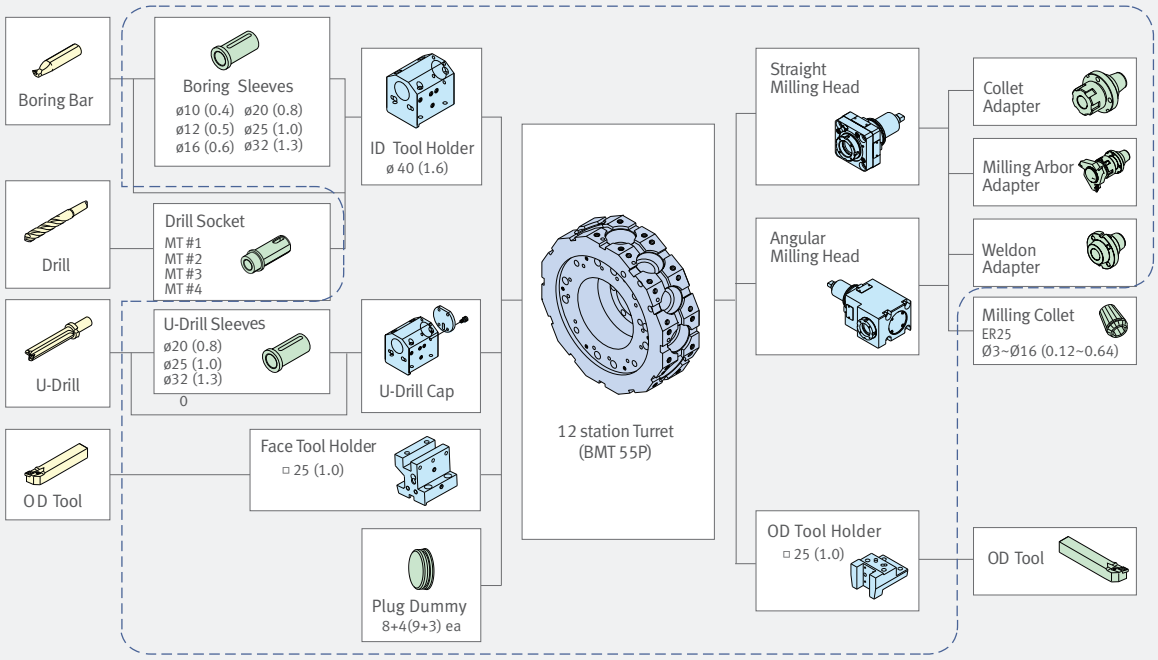

16 station

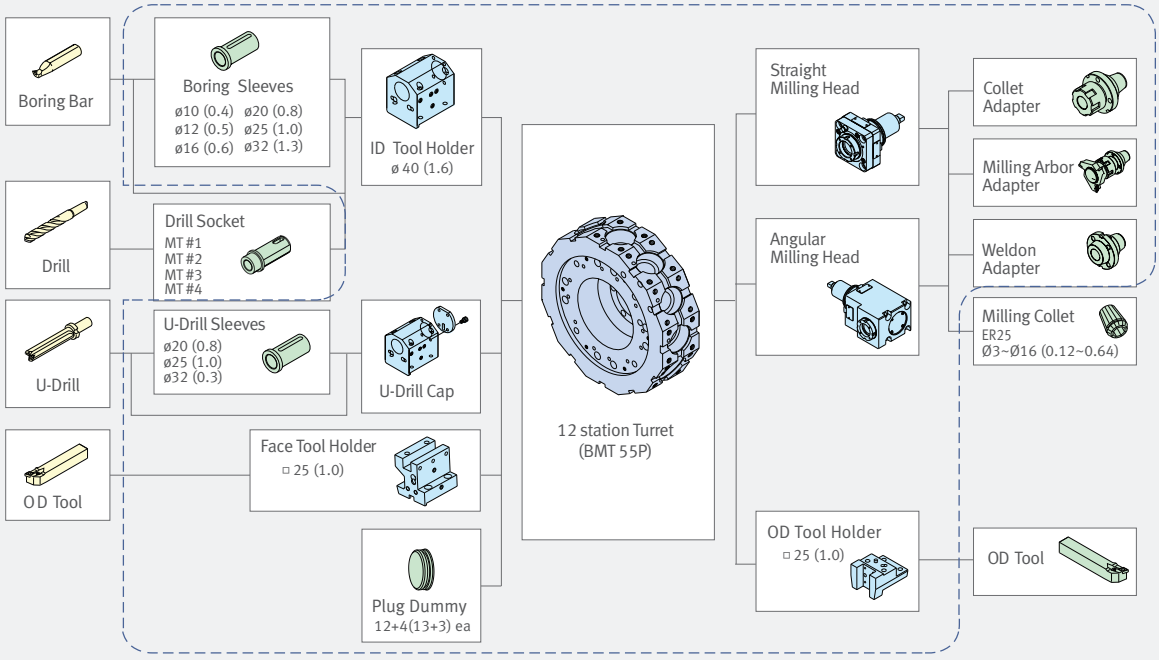

Lynx 2600Y

Unit : mm (inch)

24 station

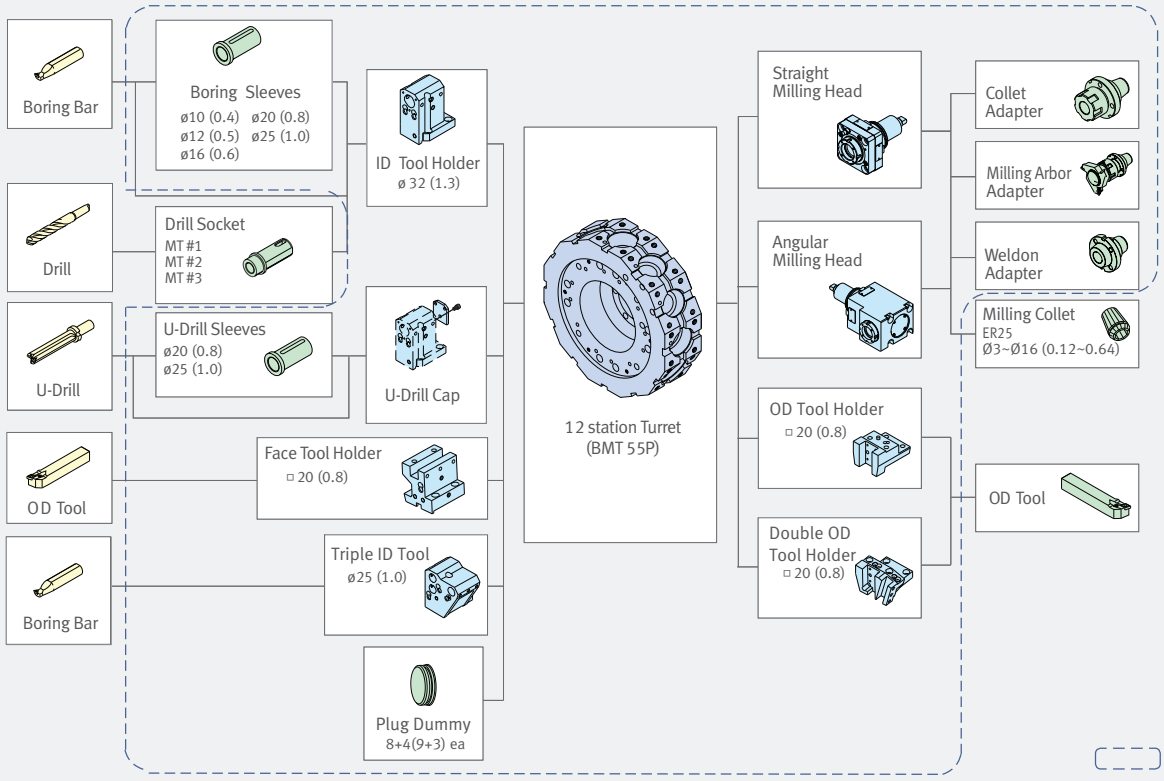

Lynx 2600SY

12 station

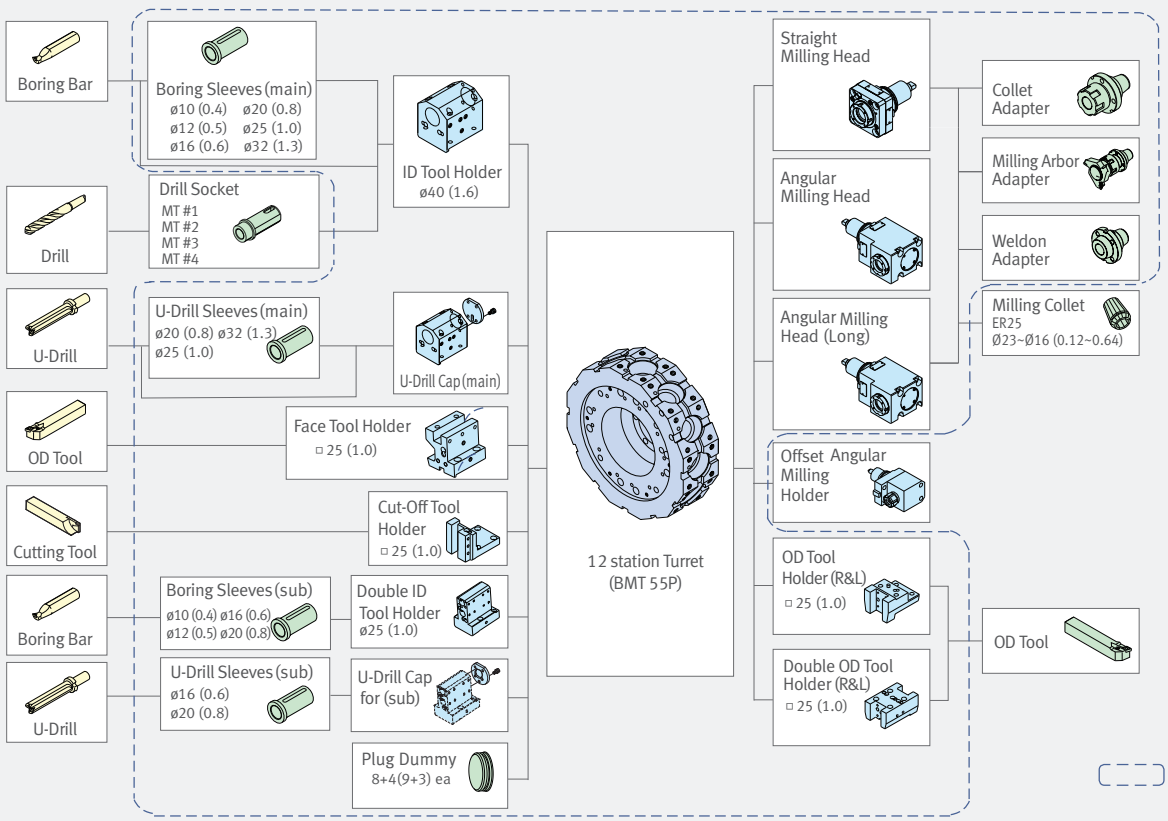

Tooling System

Lynx 2600SY

16 station

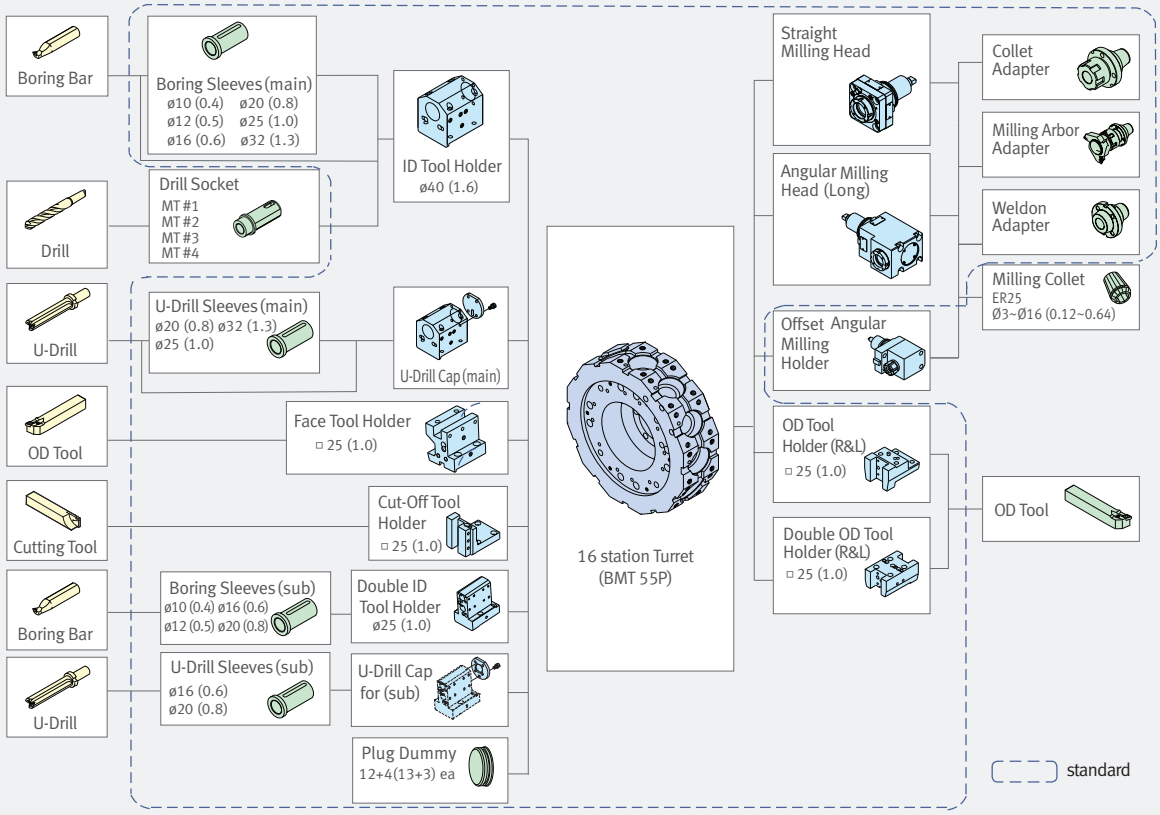

24 station

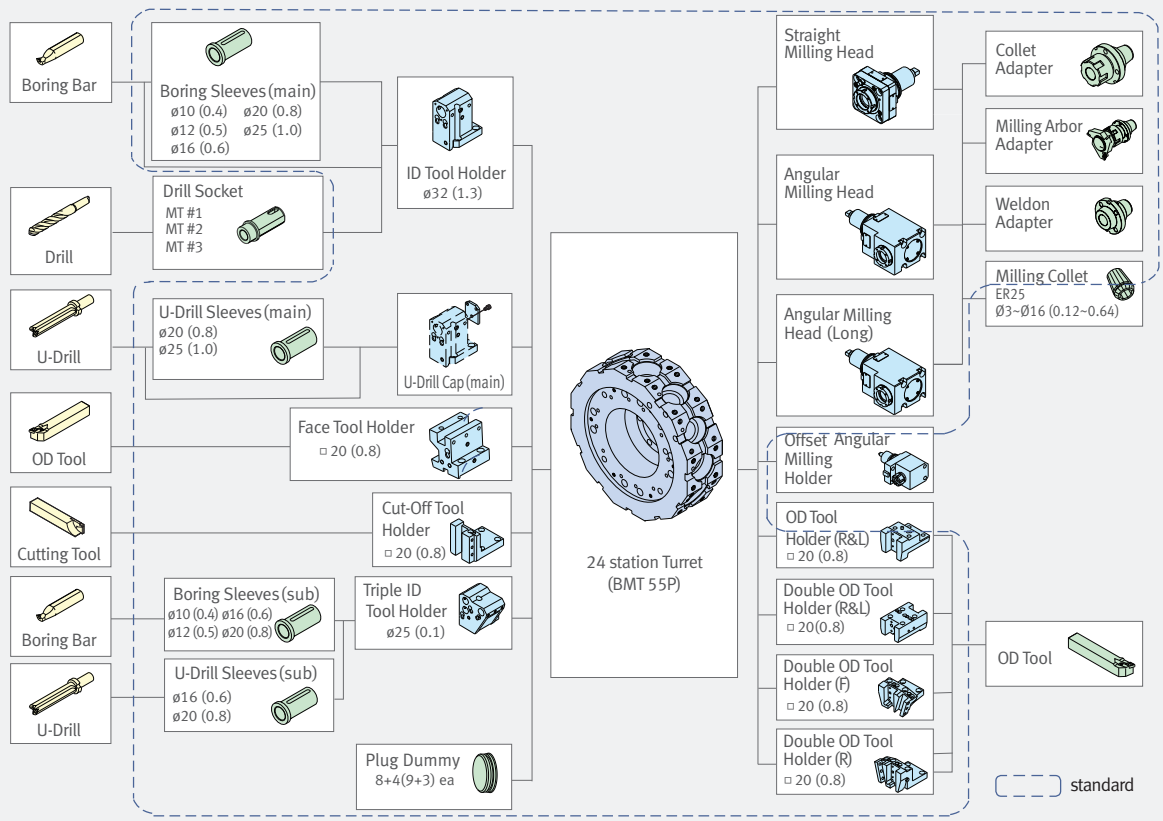

Working Range

Lynx 2100LSY

Unit : mm (inch)

ID Holder

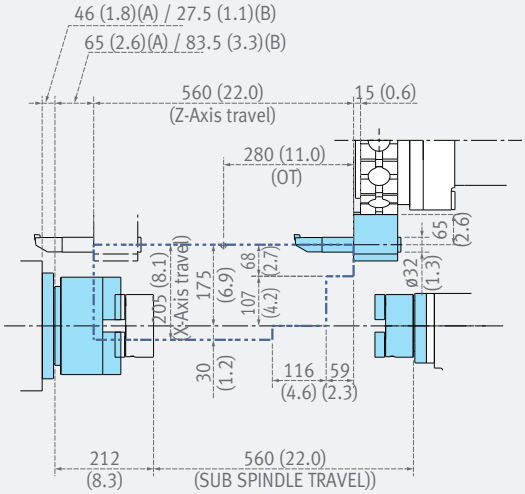

OD Holder

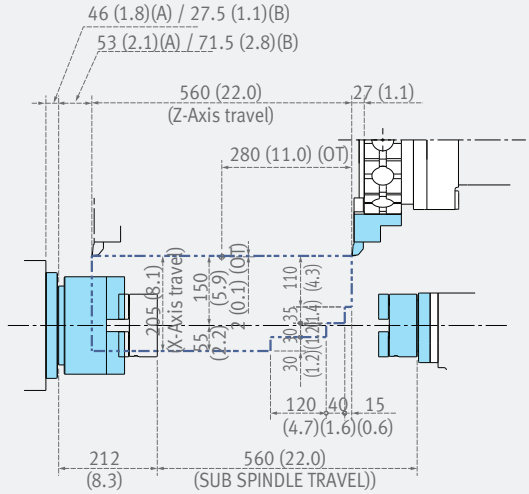

Face Tool Holder

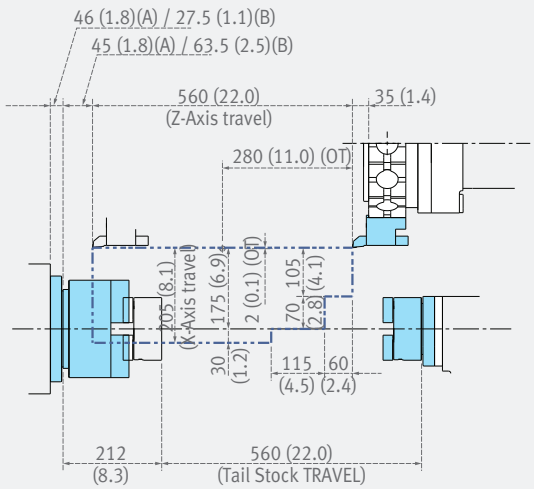

Double OD Holder

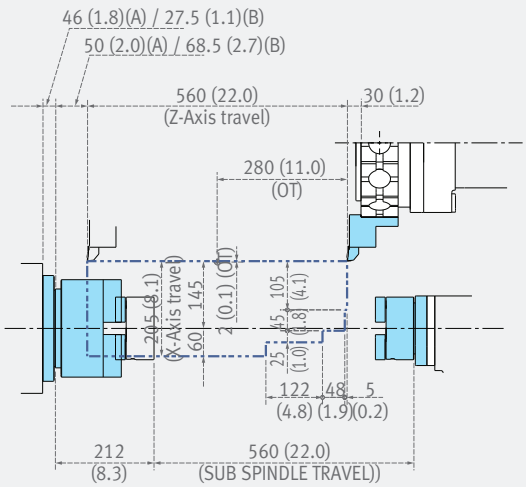

Triple ID Holder

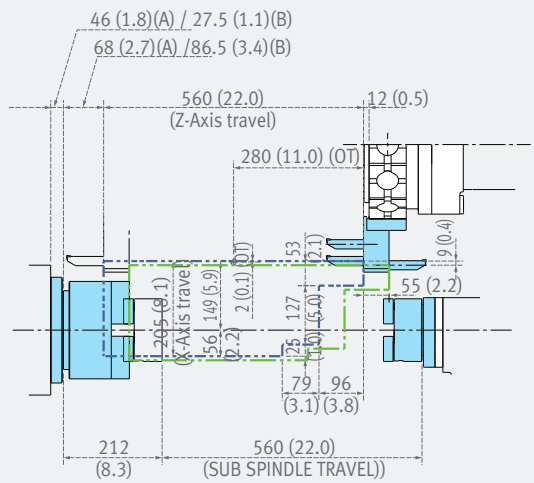

(A) : 6 inch
(B) : 8 inch

Working Range

Lynx 2100LSY

Unit : mm (inch)

Straight Milling Holder

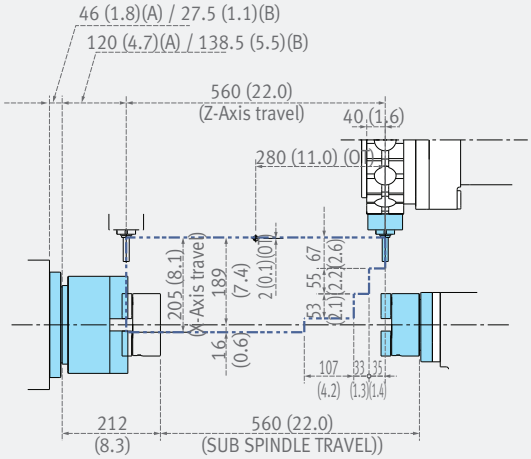

Angular Milling Holder

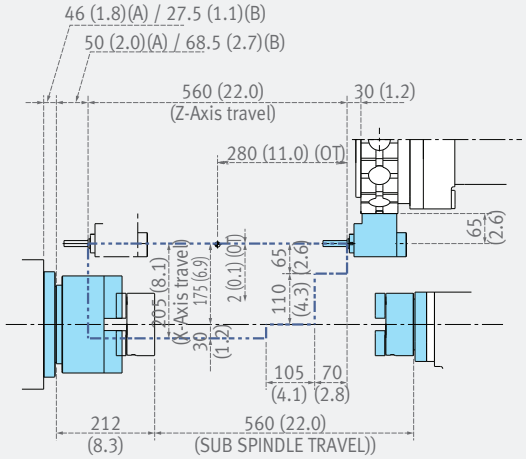

Double ID Holder

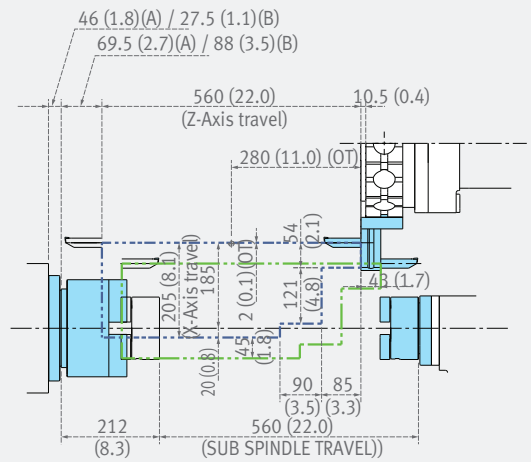

Double OD Holder (Sub)

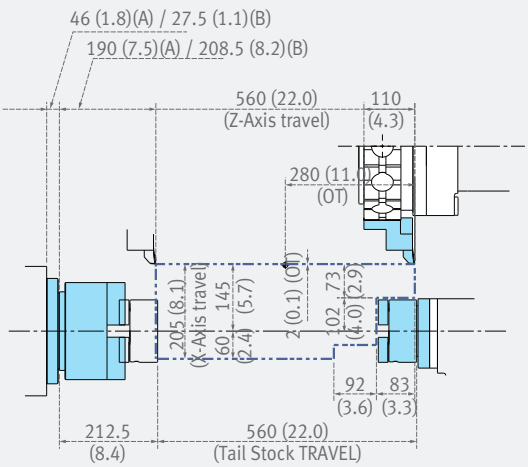

Angular Milling Holder (Offset)

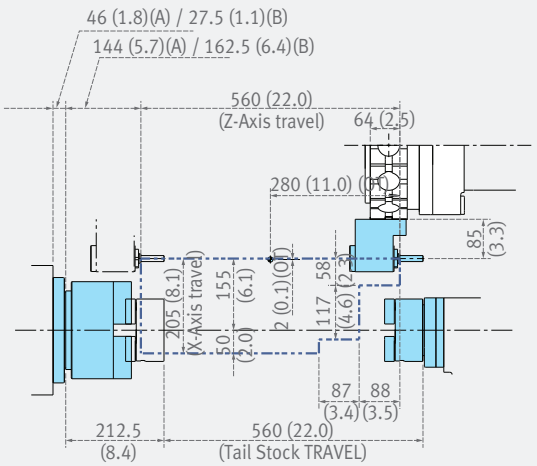

(A) : 6 inch
(B) : 8 inch

Lynx 2100LY

Unit : mm (inch)

ID Holder

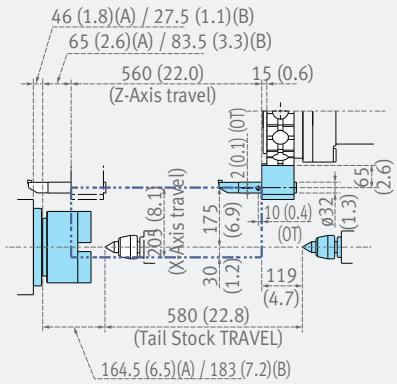

OD Holder

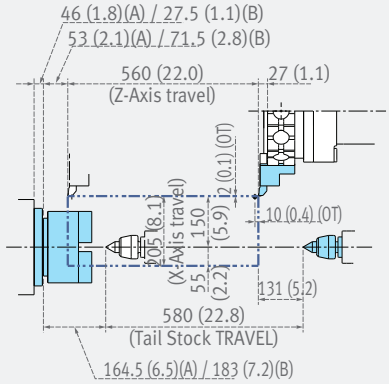

Face Tool Holder

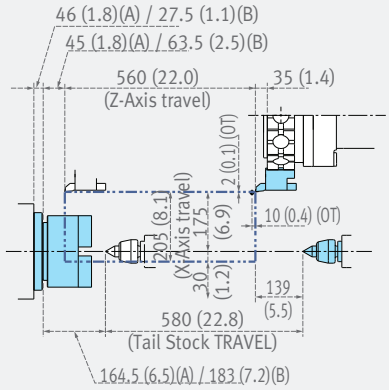

Double OD Holder

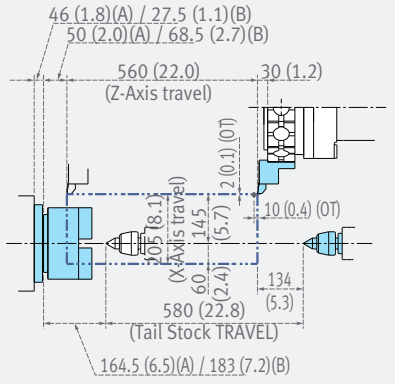

Triple ID Holder

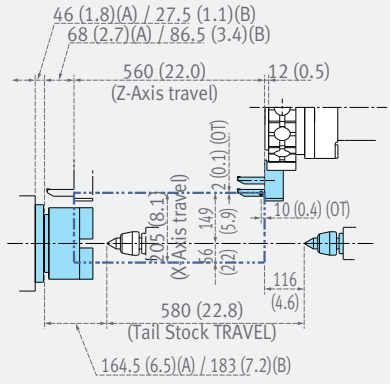

Straight Milling Holder

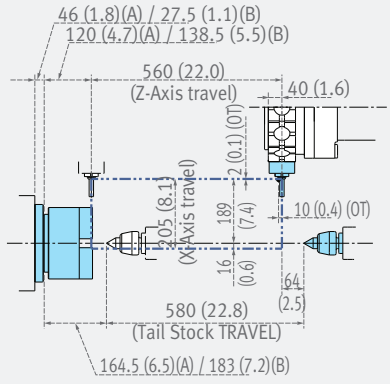

Angular Milling Holder

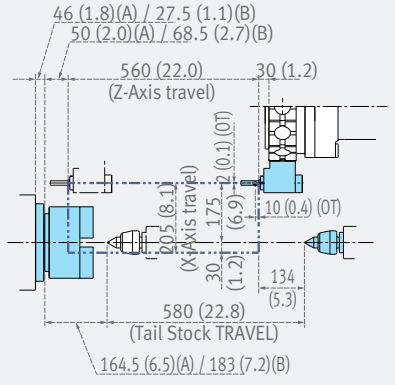

(A) : 6 inch
(B) : 8 inch

Working Range

Lynx 2600Y (12 station)

Unit : mm (inch)

ID Holder

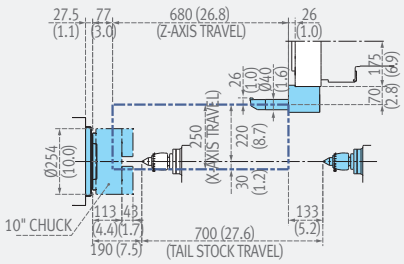

OD Holder

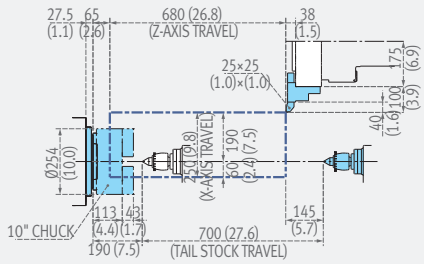

Face Holder

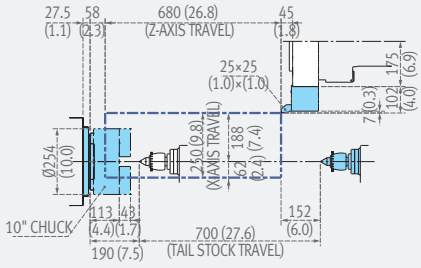

Straight Milling Holder

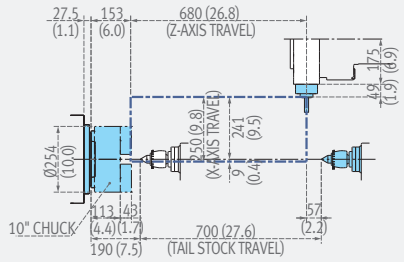

Angular Milling Holder (Main)

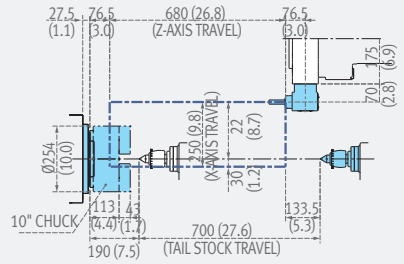

Lynx 2600Y (16 station)

Unit : mm (inch)

ID Holder

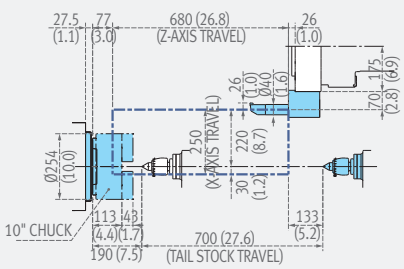

OD Holder

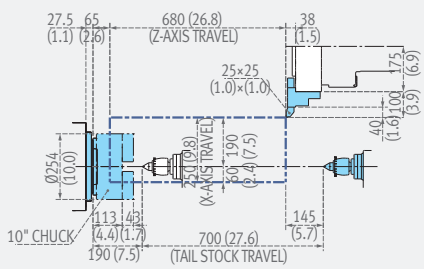

Face Holder

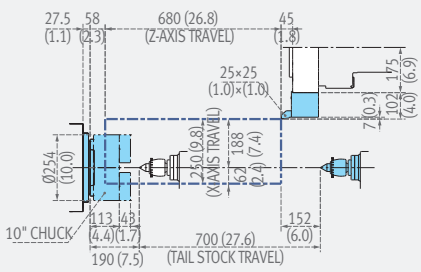

Straight Milling Holder

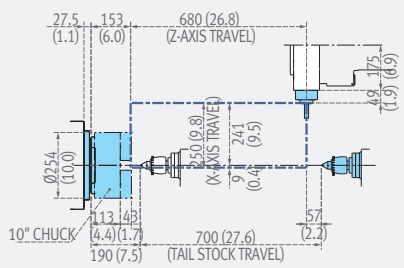

Angular Milling Holder (Main)

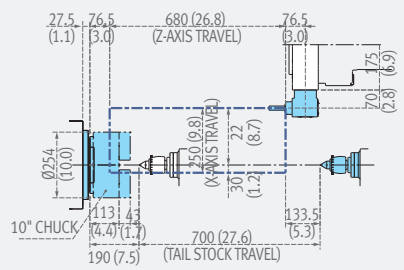

Lynx 2600Y (24 st. Indexing)

Unit : mm (inch)

ID Holder

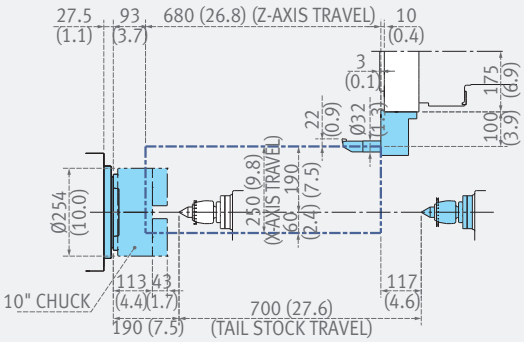

OD Holder

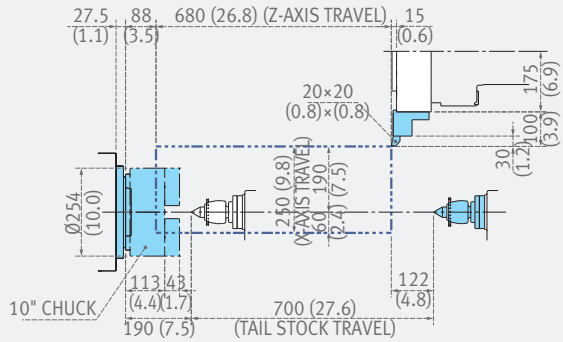

Face Holder

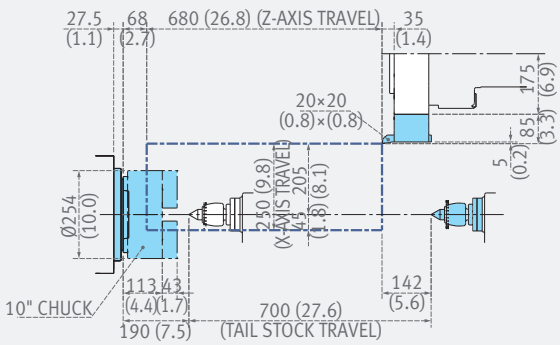

Double OD-F Holder

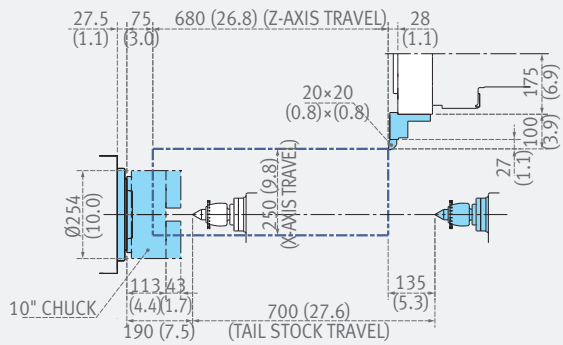

Triple ID Holder

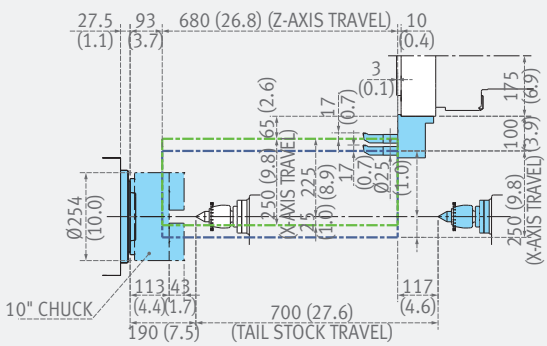

Straight Milling Holder

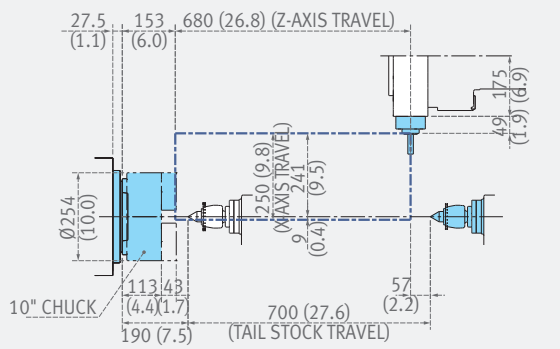

Angular Milling Holder (Main)

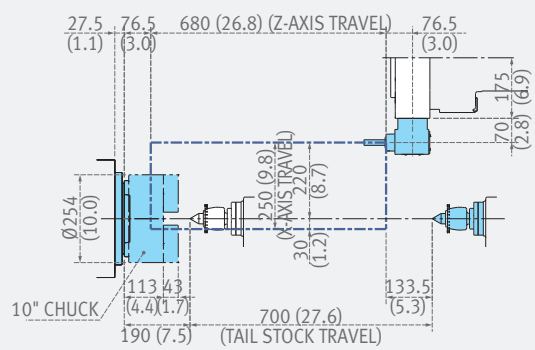

Working Range

Lynx 2600SY (12 station)

Unit : mm (inch)

ID Holder

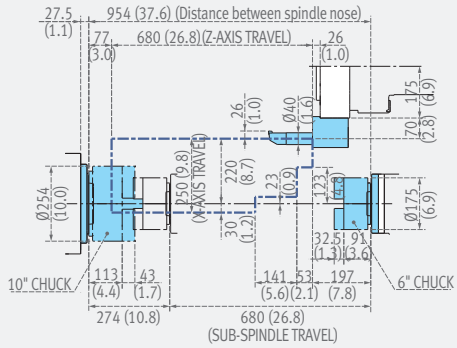

OD Holder

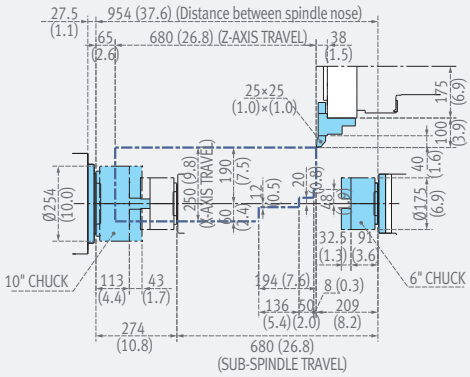

Face Holder

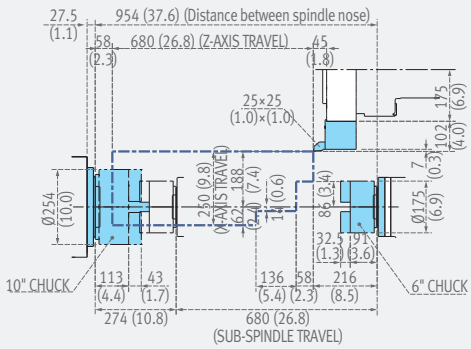

Double OD-B Holder

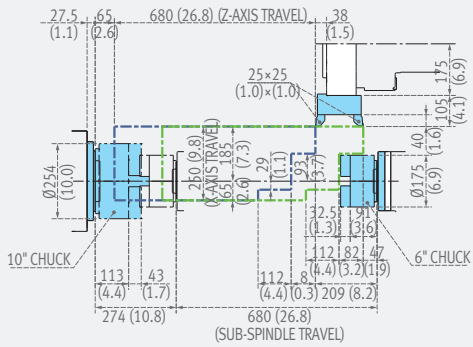

Double ID Holder

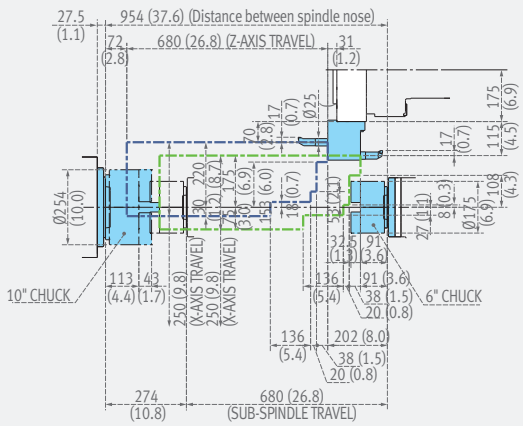

Straight Milling Holder

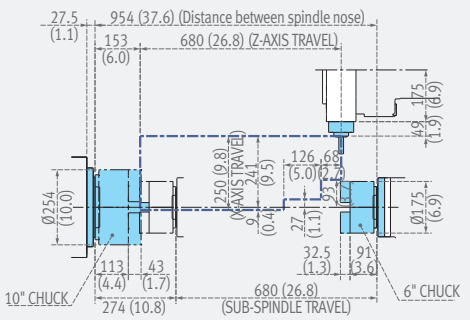

Angular Milling Holder (Main)

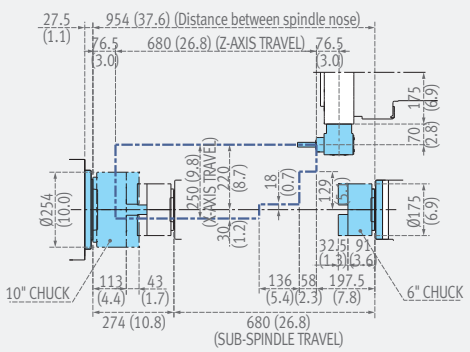

Angular Milling Holder (Sub)

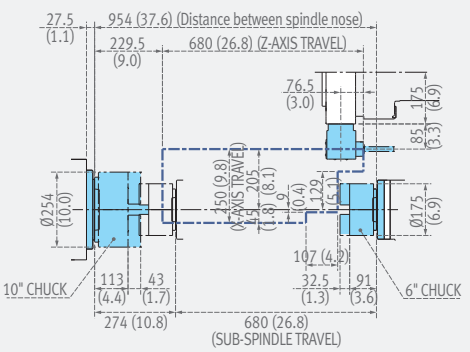

Lynx 2600SY (16 station)

Unit : mm (inch)

ID Holder

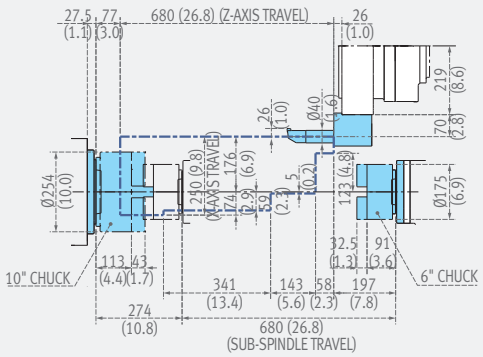

OD Holder

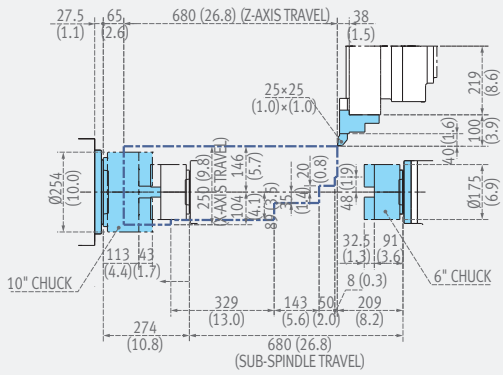

Face Holder

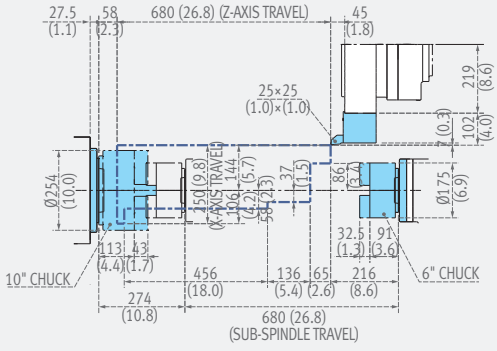

Double OD-B Holder

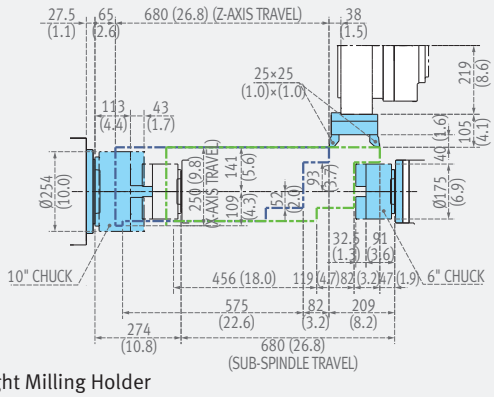

Double ID Holder

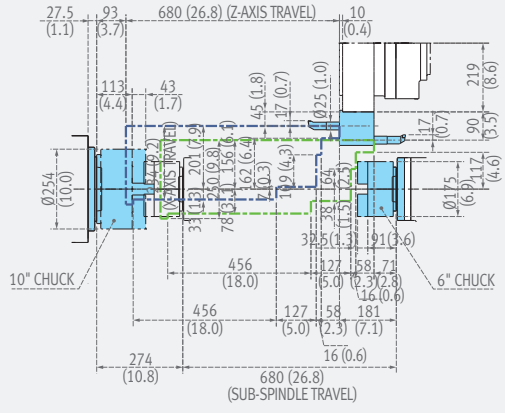

Straight Milling Holder

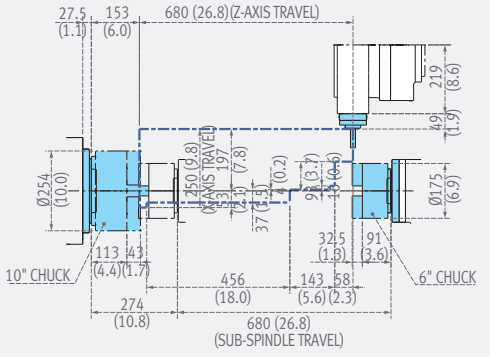

Angular Milling Holder (Main)

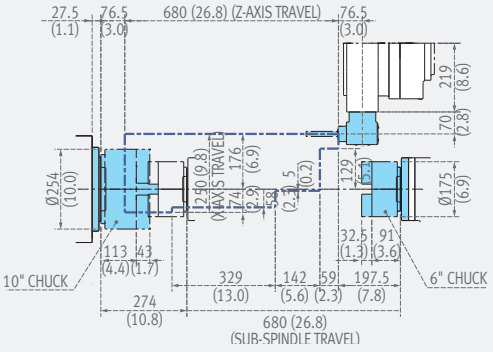

Angular Milling Holder (Sub)

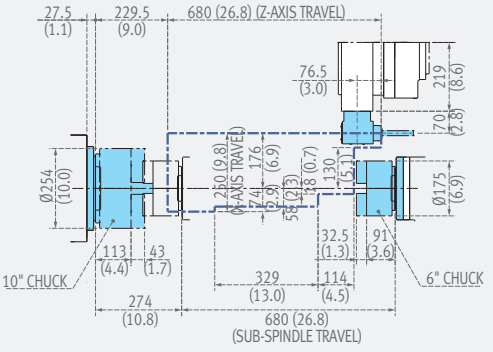

Working Range

Lynx 2600SY (24 st. Indexing)

Unit : mm (inch)

ID Holder

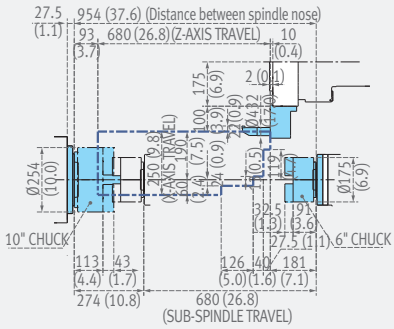

OD Holder

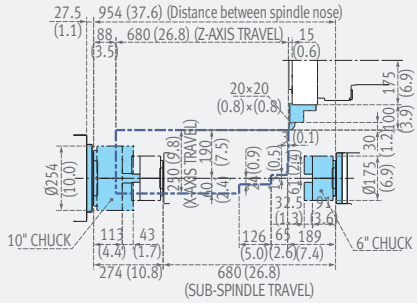

Double OD-F Holder

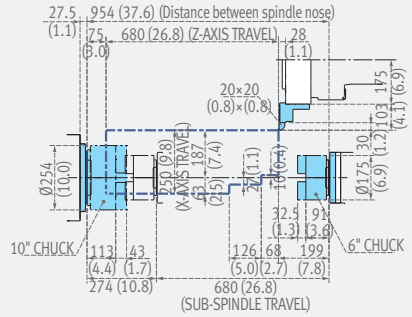

Double OD-R Holder

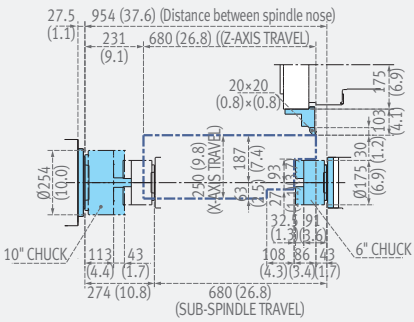

Triple ID Holder

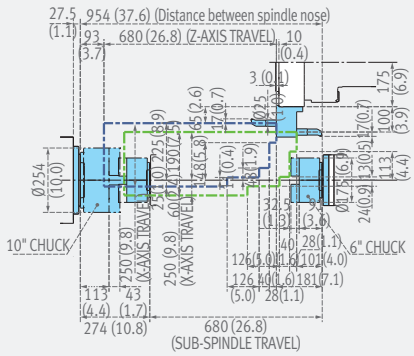

Double OD-B Holder

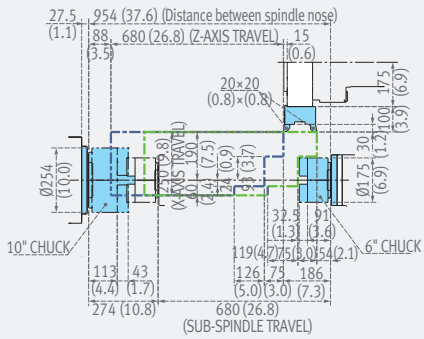

Straight Milling Holder

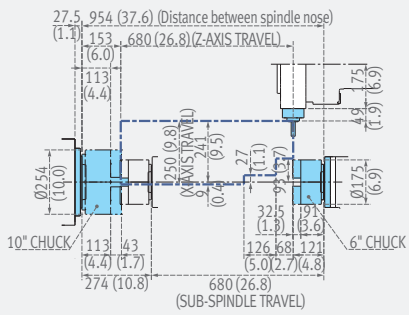

Angular Milling Holder (Main)

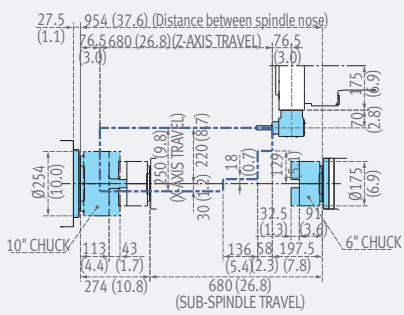

Angular Milling Holder (Sub)

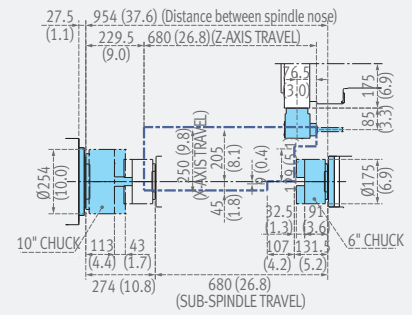

Machine Specifications

Lynx 2100LY
Lynx 2600Y

Description			Unit	Lynx 2100LYA	Lynx 2100LYB	Lynx 2100LSYA	Lynx 2100LSYB	Lynx 2600Y	Lynx 2600SY
Capacity	Swing over bed		mm (inch)	600 (23.6)				630 (24.8)	
	Swing over saddle		mm (inch)	400 (15.7)				460 (18.1)	
	Recom. Turning diameter		mm (inch)	170 (6.7)	210 (8.3)	170 (6.7)	210 (8.3)	255 (10.0)	
	Max. Turning diameter		mm (inch)	300 {236} (11.8 {9.3})				380 (15.0)	
	Max. Turning length		mm (inch)	510 (20.1)				610 (24.0)	
	Chuck size		inch	6 {8}*	8 {10}*	6 {8}*	8 {10}*	10 {12}*	
	Bar working diameter		mm (inch)	51 (2.0)	65 (2.6)	51 (2.0)	65 (2.6)	81 (3.2)	
Travels	Travel distance	X-axis	mm (inch)	205 (8.1)				250 (9.8)	
		Y-axis	mm (inch)	105 (±52.5) (4.1 (±2.1))				105 (±52.5) (4.1 (±2.1))	
		Z-axis	mm (inch)	560 (22.0)				680 (26.8)	
Feedrates	Rapid Traverse Rate	X-axis	m/min (ipm)	30 (1181.1)				30 (1181.1)	
		Y-axis	m/min (ipm)	10 (393.7)				10 (393.7)	
		Z-axis	m/min (ipm)	36 (1417.3)				30 (1181.1)	
Spindle	Max. Spindle speed		r/min	6000	4500	6000	4500	3500	
	Main spindle motor power (15min/Con.)(FANUC)		kW (Hp)	15/11 (20.1/14.8) (15min/Cont.)				18.5/15/15 (S6 25%/S6 40%/Cont.)	
	Main spindle motor power (S6-60%/ Cont.) (SIEMENS)		kW (Hp)	12.6/10.5 (16.9/14.1) (S6 60%/Cont.)				**need tech. consultation	
	Max. Spindle Torque for Turning (FANUC)		N·m (ft-lbs)	127 (93.7)	169 (124.7)	127 (93.7)	169 (124.7)	403 (297.4)	
	Max. Spindle Torque for Turning (SIEMENS)		N·m (ft-lbs)	100.8 (74.4)	134.4 (99.2)	100.8 (74.4)	134.4 (99.2)	**need tech. consultation	
	Spindle nose		ASA	A2-5	A2-6	A2-5	A2-6	A2-8	
	Spindle bearing diameter (Front)		mm (inch)	90 (3.5)	110 (4.3)	90 (3.5)	110 (4.3)	130 (5.1)	
	Spindle through hole diameter		mm (inch)	61 (2.4)	76 (3.0)	61 (2.4)	76 (3.0)	91 (3.6)	
	Min. spindle Indexing angle (C-axis)		deg	0.001					
Turret	No. of tool stations		ea	12 {24positin index}* {16}*					
	OD tool size		mm (inch)	20 x 20 (0.75 x 0.75)				25 x 25 (1.0 x 1.0)	
	Max. boring bar size		mm (inch)	Ø32 (Ø1.3)				Ø40 (Ø1.6)	
	Turret Indexing time (1 station swivel)		sec	0.11				0.15	
	Max. Rotary tool speed		r/min	6000 {10000}*				5000	
	Rotary tool motor power (FANUC)		kW (Hp)	3.7 (5.0)				5.5 (7.4)	
	Rotary tool motor power (SIEMENS)		kW (Hp)	7.79 (10.4)				**need tech. consultation	
Tailstock	Tailstock travel		mm (inch)	580 (22.8)		-		700 (27.6)	-
	Quill bore taper		MT	MT#4		-		MT#4	-
Sub spindle	Chuck size		inch	-		5		-	6
	Max. Spindle speed		r/min	-		6000		-	4500
	Main spindle motor power (FANUC)		kW (Hp)	-		5.5/3.7 (7.4/5.0) (30min/Cont.)		-	7.5/5.5/5.5 (S6 25%/S6 40%/Cont.)
	Main spindle motor power (SIEMENS)		kW (Hp)	-		8.3/7 (11.1/9.4) (S6 60%/Cont.)		-	**need tech. consultation
	Max. Spindle Torque for Turning (FANUC)		N·m (ft-lbs)	-		46 (33.9)		-	84 (62.0)
	Max. Spindle Torque for Turning (SIEMENS)		N·m (ft-lbs)	-		61 (45.0)		-	**need tech. consultation
	Spindle nose		-	-		Flat Ø110		-	A2-5
	Spindle bearing diameter (Front)		mm (inch)	-		75 (3.0)		-	90 (3.5)
	Spindle through hole diameter		mm (inch)	-		43 (1.7)		-	61 (2.4)
	Min. spindle Indexing angle (C-axis)		deg	-		0.001		-	0.001
Power source	Electric power supply (FANUC / SIEMENS)		kVA	28.22 / 28.73		34.09 / 28.73		-	37.66
Machine Dimensions	Length		mm (inch)	2880 (113.4)				3425 (134.8)	
	Width		mm (inch)	1711 (67.4)				1920 (75.6)	
	Height		mm (inch)	1921 (75.6)				2095 (82.5)	
	Weight		kg (lb)	3850 (8487.7)	3900 (8597.9)	4150 (9149.0)	4200 (9259.3)	5750 (12676.4)	6000 (13227.5)
CNC	NC system			DOOSAN Fanuc i Plus, SIEMENS S828D					

* { } : Option

NC unit specifications

FANUC

● Standard ○ Optional X Not applicable

NO.	Division	Item	Spec	DOOSAN Fanuc i Plus	
				Lynx 2100LY/ 2600Y	Lynx 2100LSY/ 2600SY
1	Controlled axis	Controlled axes		4 (X, Z, C, Y)	6 (X, Z, C1, Y, C2, B)
2		Axis control by PMC		●	●
3		Synchronous/Composite control (C1 & C2 Synchro Control)		X	●
4		Torque control		●	●
5		Inch/metric conversion		●	●
6		Stored limit check before move		●	●
7		Unexpected disturbance torque detection function		●	●
8		Position switch		●	●
9	Operation	DNC operation with memory card		●	●
10		Handle interruption		○	○
11		Manual handle retrace		○	○
12	Interpolation functions	Nano interpolation		●	●
13		Linear interpolation		●	●
14		Circular interpolation		●	●
15		Helical interpolation		●	●
16		Thread cutting, synchronous cutting		●	●
17		Thread cutting retract		●	●
18		Continuous threading		●	●
19		High-speed skip	Input signal is 8points.	○	○
20		2nd reference position return	G30	●	●
21	feed function	AI contour control I		●	●
22		AI contour control II		○	○
23		Rapid traverse block overlap		●	●
24	Program input	Optional block skip	9 pieces	●	●
25		Absolute/incremental programming	Combined use in thesame block	●	●
26		Diameter/Radius programming		●	●
27		Automatic coordinate system setting		●	●
28		Workpiece coordinate system	G52 - G59	●	●
29		Chamfering/Corner R		●	●
30		Custom macro		●	●
31		Addition of custom macro commonvariables	#100 - #199, #500 -#999	●	●
32		Interruption type custom macro		●	●
33		Canned cycle		●	●
34		Multiple repetitive cycles	G70~G76	●	●
35		Multiple repetitive cycles II	Pocket profile	●	●
36		Canned cycle for drilling		●	●
37		Coordinate system shift		●	●
38		Direct input of coordinate systemshift		●	●
39		Pattern data input		●	●
40	Operation Guidance Function	EZ Guide i (Conversational Programming Solution)		●*1)	●*1)
41		iHMI with Machining Cycle		○*2)	○*2)
42		EZ Operation package		●	●
43	Auxiliary/ Spindle speed function	Constant surface speed control		●	●
44		Rigid tap		●	●
45		Arbitrary speed threading		○	○
46	Tool function/ Tool compensation	Y-axis offset		●	●
47		Tool offset pairs	128-pairs	●	●
48		Tool offset pairs	200-pairs	○	○
49		Tool radius/Tool nose radiuscompensation		●	●
50		Tool geometry/wear compensation		●	●
51		Automatic tool offset	G36/G37	●	●
52		Direct input of offset valuemeasured B		●	●
53		Tool life management		●	●
54	Accuracy compensation function	Backlash compensation for eachrapid traverse and cutting feed		●	●
55		Stored pitch error compensation		○	○
56	Editing operation	Part program storage size &Number of registerable programs	1280M(512KB)_400programs	X	X
57		Part program storage size &Number of registerable programs	2560M(1MB)_800programs	X	X
58		Part program storage size &Number of registerable programs	5120M(2MB)_400programs	X	X
59		Part program storage size &Number of registerable programs	5120M(2MB)_800programs	X	X
60		Playback		●	●
61	Data input / output	Fast data server		○	○
62		External data input		●	●
63		Memory card input/output		●	●
64		USB memory input/output		●	●
65		Automatic data backup		●	●
66	Interface function	Embedded Ethernet		●	●
67		Fast Ethernet		○	○
68	Others	Display unit	15” color LCD	●	●
69			15” color LCD with Touch Panel	○	○
70	Robot interface	Robot interface with PMC I/Omodule		○	○
71		Robot interface with PROFIBUS-DP		○	○

*1) Only with 15" LCD standard *2) Only with 15" Touch LCD standard

SIEMENS

● Standard ○ Optional X Not applicable

NO.	Division	Item	Spec.	Lynx 2100LY / LSY/2600Y /SY
1	Controlled axis	Controlled axes R: Milling spindle	Y-type	X, Z, C, R, Y
2			SY-type	X, Z, C, R, C2, Y, B
3			Additional B-axis	○
4		Simultaneously controlled axes	Positioning(G00)/Linear interpolation(G01) : 3 axes Circular interpolation(G02, G03) : 2 axes	●
5		Backlash compensation		●
6		Leadscrew error compensation		●
7		Measuring system error compensation		●
8		Feedforward control	velocity-dependent	●
9		Follow up mode		●
10		Programmable acceleration		●
11		Emergency stop / overtravel		●
12		Least command increment	0.001mm (0.0001 inch)	●
13		Least input increment	0.001mm (0.0001 inch)	●
14		Maximum commandable value	±99999.999mm (±3937 inch)	●
15		Machine lock (PRT)		●
16		Absolute encoder		●
17	Interpolation & Feed function	Reference point return	G75 FP=1	●
18		2nd reference point return	G75 FP=2	●
19		3rd / 4th reference return	G75 FP=3, 4	●
20		Linear interpolation	Max. 4	●
21		Circular interpolation	G02, G03	●
22		Inverse time feedrate	G93	●
23		Helical interpolation		●
24		Universal interpolator NURBS		●
25		Spline interpolation (A, B and C splines)		○
26		Dwell	G04	●
27		Separate path feed for corners and chamfers		●
28		Acceleration with Jerklimitation		●
29	Spindle function	Retraction for rigid tapping		●
30	Tool function	Tool radius compensations in plane		
31		• With approach and retract strategies		●
32		• With transition circle/ellipse on outer edges		●
33		Number of tools/cutting edges in tool list		256/512
34		Tool length compensation		●
35		Operation with tool management		●
36		Monitoring of tool life and workpiece count		●
37		Manual measurement of tool offset		●
38	Programming & Editing function	Number of levels for skip blocks 1		●
39		Number of levels for skip blocks 8		○
40		Polar coordinates		●
41		Dimensions metric/inch, changeover manually or via program		●
42		Program functions		
43		• Dynamic preprocessing memory FIFO		●
44		• Look Ahead, IPO blocks, buffered		1
45		• Inclined-surface machining with swivel cycle		●
46		• Axis/spindle replacement		●
47		• Geometry axes, switchable online in the CNC program		●
48		Online ISO dialect interpreter		●
49		Program/workpiece management		
50		• Parts programs on NCU, max. number		300
51		• Workpieces on NCU, max. number		100
52		• On additional plug-in CF card		●
53		• On USB storage medium (e.g. disk drive, USB stick)		●
54		• On network drive		○
55		Program editor		
56		• Programming support for cycles program(Program Guide)		●
57		• CNC editor with editing functions: Marking, copying, deleting		●
58		• Programming graphics/free contour input (contour calculator)		●
59		• ShopTurn/ShopMill Machining step programming		●
60		Technology cycles for drilling/milling		●
61		Pocket milling free contour and islands stock removal cycle		●
62		Residual material detection		●
63		Access protection for cycles		●
64		Programming support can be extended, e.g. customer cycles		●
65		3D simulation, finished part		●
66		Simultaneous recording		●
67	OTHERS FUNCTIONS (Operation, setting & Display, etc)	JOG		
68		• Handwheel selection		●
69		• Switchover: inch/metric		●
70		• Manual measurement of zero/work offset		●
71		• Manual measurement of tool offset		●
72		• Automatic tool/workpiece measurement		●
73		Automatic		
74		• Execution from USB or CF card interface on operator panel front		●
75		• Execution from network drive		○
76		Operating software languages		
77		• Ch_S,Ch_T, En, Fr, Gr, It, Kr, Pt, Sp		●
78		• Additional languages, use of language extensions		●
79		Limit switch monitoring		●
80		Software and hardware limit switches		●
81		Position monitoring		●
82		Standstill (zero-speed) monitoring		●
83		Clamping monitoring		●
84		2D/3D protection zones		●
85		Contour monitoring		●
86		Remote Control System (RCS) remote diagnostics		
87		• RCS Host remote diagnostics function		○
88		• RCS Commander (viewer function)	RCS Commander for PC/PG on CD-ROM	●
89		Easy Extend		●
90		Contour handwheel		●
91		Cross-mode actions (ASUPs and synchronized actions in all operating modes)		○

Responding to Customers Anytime, Anywhere

Doosan Machine Tools' Global Network, Responding to Customer's Needs nearby, Anytime, Anywhere

Doosan machine tools provides a system-based professional support service before and after the machine tool sale by responding quickly and efficiently to customers' demands. By supplying spare parts, product training, field service and technical support, we can provide top class support to our customers around the world.

Global Sales and Service Support Network

Corporations	Dealer Networks	Technical Centers	Service Post	Factories
		Technical Center: Sales Support, Service Support, Parts Support		
4	167	51	200	3

Doosan Machine Tools Customer Support Service

We help customers to achieve success by providing a variety of professional services from pre-sales consultancy to post-sales support.

Supplying Parts

- Supplying a wide range of original Doosan spare parts
- Parts repair service

Field Services

- On site service
- Machine installation and testing
- Scheduled preventive maintenance
- Machine repair

Technical Support

- Supports machining methods and technology
- Responds to technical queries
- Provides technical consultancy

Training

- Programming / machine setup and operation
- Electrical and mechanical maintenance
- Applications engineering

Major Specifications

Lynx 2100LY series
Lynx 2600Y series

Discription	Unit	Lynx 2100LYA	Lynx 2100LYB	Lynx 2100LSYA	Lynx 2100LSYB	Lynx 2600Y	Lynx 2600SY
Max. turning diameter	mm (inch)	300 {236} (11.8 {9.3})				380 {292}	
Max. turning length	mm (inch)	510 (20.1)				610 (24.0)	
Chuck size	inch	6 {8}*	8 {10}*	6 {8}*	8 {10}*	10 {12}*	
Max. spindle speed	r/min	6000	4500	6000	4500	3500	
Spindle motor power	kW (Hp)	15/11 (20.1/14.8) (15min/Cont.)				18.5/15/15 (S6 25%/ S6 40%/Cont.)	

* { } option

Doosan Machine Tools

www.doosanmachinetools.com

Head Office
22F T Tower, 30, Sowol-ro 2-gil, Jung-gu, Seoul, Korea, 04637
Tel +82-2-6972-0370 / 0350
Fax +82-2-6972-0400

Doosan Machine Tools America
19A Chapin Rd., Pine Brook, NJ 07058, U.S.A.
Tel +1-973-618-2500
Fax +1-973-618-2501

Doosan Machine Tools Europe
Emdener Strasse 24, D-41540 Dormagen, Germany
Tel +49-2133-5067-100
Fax +49-2133-5067-111

Doosan Machine Tools India
No.82, Jakkuar Village, Yelahanka Hobil, Bangalore-560064
Tel + 91-80-2205-6900
E-mail india@doosanmt.com

Doosan Machine Tools China
Room 101,201,301, Building 39 Xinzhuan Highway No.258 Songjiang District,China Shanghai(201612)
Tel +86 21-5445-1155
Fax +86 21-6405-1472

* For more details, please contact Doosan Machine Tools.
* The specifications and information above-mentioned may be changed without prior notice.
* Doosan Machine Tools Co., Ltd. is a subsidiary of MBK Partners. The trademark DOOSAN is used under a licensing agreement with Doosan Corporation, the registered trademark holder.

Fire Safety Precautions | There is a high risk or fire when using non-water-soluble cutting fluids, processing flammable materials, neglecting use coolants and modifying the machine without the consent of the manufacturer. Please check the SAFETY GUIDANCE carefully before using the machine.

ver. EN 200910 SU